INSTALLATION MANUAL

SST-ECLIPSE SERVO DRIVES

MODELS E4XX/E5XX AND E6XX/E7XX

VERSION 2.82 / DECEMBER 17, 2025

TEKNIC, INC PHONE (585)784-7454

THIS PAGE INTENTIONALLY LEFT BLANK

Table of Contents

Table of Contents 3
Overview 6
Safety 7
General Precautionary Statement 7
Symbols Used in this Manual 7
Mechanical Installation 8
Mounting Information 8
Mounting and Clearance Dimensions (Models E4xx/E5xx) 9
Mounting and Clearance Dimensions (Models E6xx/E7xx) 10
Notes on Electrical Noise and Grounding 11
Electrical Installation 12
Overview: Electrical Isolation & Grounding 12
Grounding & Shielding Rules 13
Controller Interface - Connector J1 15
The SST-ADT-E Accessory Card 15
Digital Drive Interface 17
Simplified, High Reliability Interface 17
Output Control Signals 18
HLFB~ (High Level Feedback) Operation 19
Step & Direction Signaling 21
Analog Command Interface 24
Limit Switch Wiring 24
Power Supply Requirements (E4xx/E5xx) 26
Power Supply Current Requirements (E4xx/E5xx) 27
Power Supply Requirements (E6xx/E7xx) 27
Logic Power Backup (Optional) 29
Logic Power Backup (LPB) Supply 29
Connecting a Motor to the SSt-Eclipse 30
Overview 30
Connecting Teknic motors to Eclipse E4xx/E5xx servo drives (connector P5) 30
Connecting Teknic motors to Eclipse E6xx/E7xx servo drives 31
Connecting to Third Party Motors 31
Guidelines for Motor Cable Construction 33
Using QuickSet Software 34
QuickSet Software Setup 34
System Requirements 34
Download QuickSet 34
Install QuickSet Software 34
Communicating with the SSt-Eclipse 35
Eclipse Communication Setup 35
Configuring QuickSet Software for Communication 36
Uploading a Motor Configuration File to the Eclipse 37
What is a Motor Configuration File? 37
loading Motor Configuration Files 38
Loading Third-Party (non-Teknic) Motor Configuration Files 38

USING THE SOFTWARE SCOPE 39
Primary Display Area (Area 1) 39
Secondary Display Area (Area 2) 40
Scope/Drive Configuration Area (Area 3) 41
Scope Control 41
Main Gains 42
Motor Gains 43
Other Settings 43
Cursor Display Area (area 4) 45
ECLIPSE FEATURES, TIPS, AND TRICKS 46
Introduction 46
Feature: Limit Switch Homing 46
Feature: Hard Stop Homing (Sensorless Homing) 47
Feature: Variable Load and Inertia Matching Technology™ 49
Feature: RAS for Vibration Damping and Enhanced Smoothness 51
Feature: Built in E-Stop Function 54
Feature: Control Servo Hunting with Enhanced Anti-Hunt 55
Feature: Precision Torque/Force Control for Clamping or Insertion 56
Feature: Global Torque (Force) Limiting 57
Feature: Remote Machine Tuning and Support 58
Feature: I/O Based Axis Coordination 59
Feature: Brake Solutions 60
Rotary Inline brakes (hardware brakes) 60
BEMF Brakes (electrical assist motor braking) 60
Feature: Axis Position Recovery 60
Feature: Logic Power Backup 62
Feature: Encoder Position Capture 63
Feature: Third Party Motor Support 64
Feature: Throughput Optimizer for Contouring Machines 65
Feature: Step Input Electronic Gearing 65
Feature: Digital Noise Filtering 67
APPENDIX A: SST-ECLIPSE SPECIFICATIONS 69
APPENDIX B: GOLDEN RULES OF INSTALLATION FOR SST-ECLIPSE SERVO DRIVES 79
Power 79
Grounding and Shielding 79
Motor Cables 80
Cable Making Tools & Techniques 82
General Recommendations 82
A Note on Hand Crimp Tools 83

APPENDIX C: CONNECTOR REFERENCE FOR MODELS E4XX/E5XX 84
APPENDIX D: CONNECTOR REFERENCE FOR MODELS E6XX/E7XX 86
APPENDIX E: ECLIPSE LED BLINK CODES 88
APPENDIX F: THE SST-ADT-E CARD..... 90
APPENDIX G: SIZING A POWER SUPPLY FOR ECLIPSE E4XX/E5XX DRIVES..... 91
Sizing a Power Supply (Eclipse E4xx/E5xx models)..... 91
Calculating Peak Current Requirement 91
Peak Current when Using Less Than Full Output..... 91
Calculating RMS Current Requirement 92
1. Incremental Positioning Applications 92
1A. Incremental Positioning with Reduced Output 92
2. Continuous Velocity Applications 93
APPENDIX H: WIRING THIRD-PARTY MOTORS 94
Enter the Motor Settings 94
Motor Winding Specifications:.....94
Encoder Specifications: 94
Wire the Encoder and Motor Phases.....95
Wiring the Hall/Commutation Sensors 96
Tuning the Vector Torque Loops.....98

OVERVIEW

Thank you for choosing the SSt-Eclipse digital vector servo drive. The SSt-Eclipse drive defines servo performance for a new generation of high-tech automated machinery.

Each Eclipse servo drive features a high-speed DSP that supports the seamless integration of position, velocity, and torque loops. The SSt-Eclipse DSP constantly monitors the state of the position/velocity compensator, motor magnetic field, amplifier output voltages, limit switch inputs, motor current, and many other variables. The resulting data stream—combined with advanced control algorithms and high-speed, dedicated processing power—provides the foundation for state-of-the-art motion. The result is superior servo performance (and not just in the standard benchmarks of bandwidth, settling time, and tracking accuracy) but in the *subjective* benchmarks like low audible noise, jitter-free operation, virtual elimination of overshoot, and reduction of torque chatter.

Over two decades of R&D effort combined with major advancements in DSP control technology, have yielded a unique set of new features in the SSt-Eclipse family of drives. Among them, Adaptive Inertia Matching Technology (IMT), Hard-Stop Homing, fuzzy HLFB signal false trigger suppression, and continuous current sensor calibration.

The SSt-Eclipse provides excellent servo performance and outstanding overall value without unnecessary proprietary limitations. Because the Eclipse features an open control interface, it is natively compatible with most servo controllers and indexers on the market. In addition, the SSt-Eclipse is flexible enough to control most permanent magnet servomotors (rotary or linear), voice coils, galvos, and actuators as well.

SAFETY

GENERAL PRECAUTIONARY STATEMENT

Always follow appropriate safety precautions when installing and operating Eclipse servo drives. Equipment should be designed and built to prevent personnel from coming into contact with moving parts and electrical contacts that could potentially cause injury or death. Read all cautions, warnings and notes before attempting to operate motion control devices. Follow all applicable codes and standards when using this equipment. Failure to apply this equipment as described herein may impair or neutralize protections built into the product.

SYMBOLS USED IN THIS MANUAL

The following symbols and conventions are used on the equipment and found in this manual. Please read all equipment labels and manuals before attempting to use Eclipse servo drives.

Caution, risk of danger

Identifies information about practices or circumstances that can lead to equipment damage, personal injury, or loss of life.

Shock hazard

Identifies presence of hazardous voltages or currents.

Protective earth terminal

Indicates points that must be connected to a reliable earth system for safety compliance. Protective earth connections should never be omitted.

Earth ground terminal

Frame or chassis terminal (shield)

Direct current

Note

Identifies information that is critical for successful application and understanding of the product.

Tip

Identifies additional information that may be helpful in supporting certain applications.

MECHANICAL INSTALLATION

This section contains the information you will need to properly mount your Eclipse servo drive.

MOUNTING INFORMATION

For the most effective heat dissipation, maximum continuous output power, and highest reliability, follow these mounting guidelines:

- Mount all Eclipse drives vertically as shown below. Drives should be secured to a thermally conductive material such as steel or aluminum machine frame to provide additional heat sinking.
- Follow minimum clearance and spacing guidelines to ensure proper air flow through, around, and between your Eclipse servo drives. See mounting diagrams for important clearance and spacing requirements.
- Eclipse drives are rated for operation in ambient air temperatures of 0-40C (32-104F)

Note: For machines with cabinet mounted drives:

- Mount Eclipse drives near the bottom of the cabinet where the air is cooler.
- Use forced air cooling to improve performance and add operating margin. At minimum, mount Eclipse drives in a vented enclosure that does not exceed maximum ambient air temperature during the most aggressive machine operations.
- Avoid mounting Eclipse drives above a heat source such as a power supply, transformer, or spindle drive.

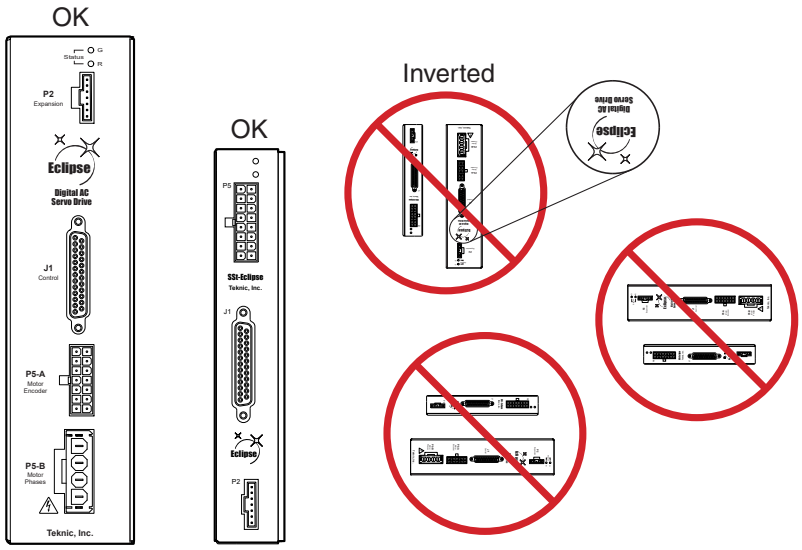

Eclipse drive mounting orientation

MOUNTING AND CLEARANCE DIMENSIONS (MODELS E4XX/E5XX)

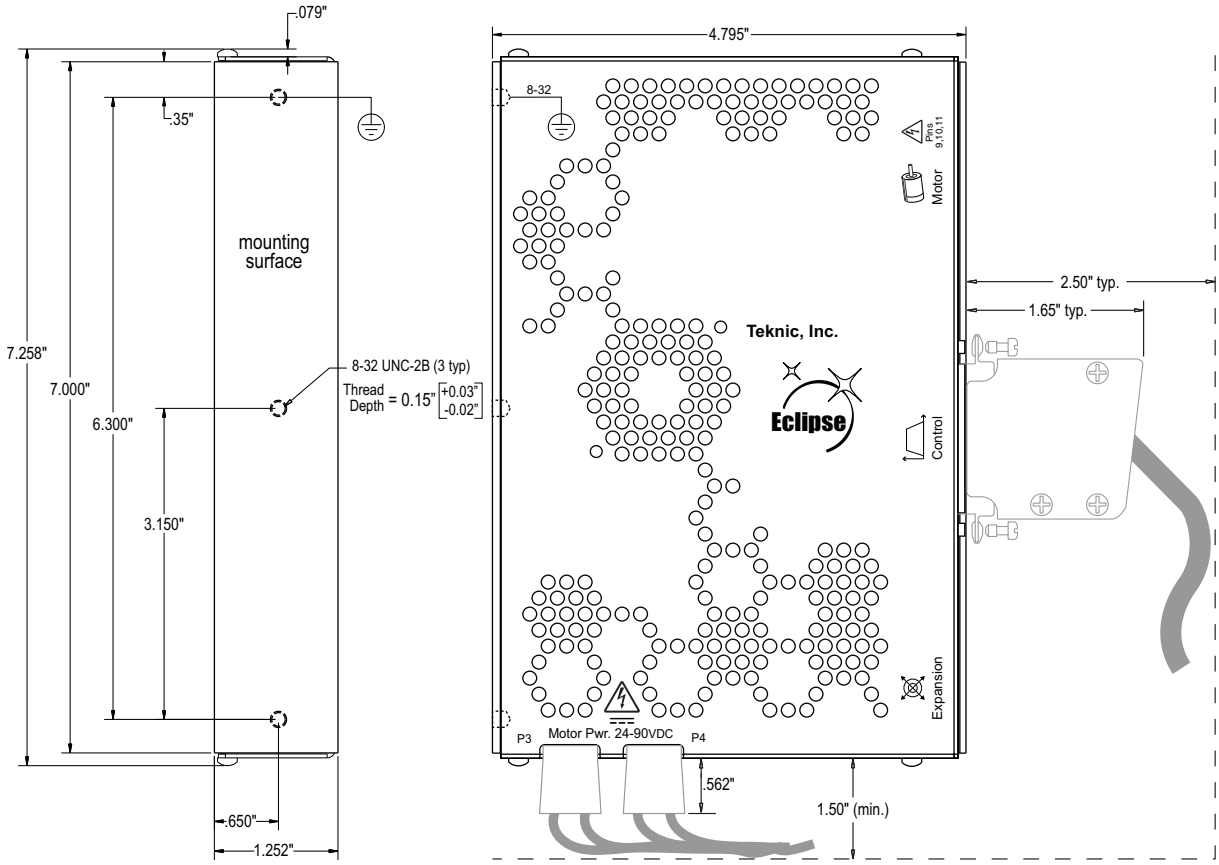

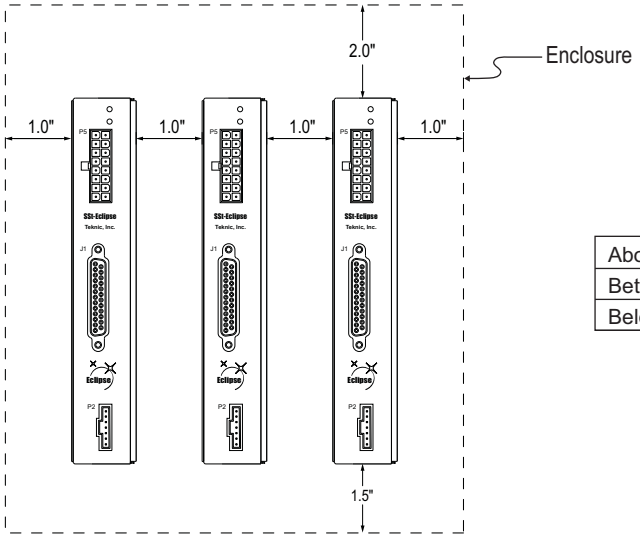

Minimum Spacing Requirements

Above Drives	2.0 in.
Between Drives	1.0 in.
Below Drives	1.5 in.

Mounting and clearance dimensions (E4xx/E5xx models)

MOUNTING AND CLEARANCE DIMENSIONS (MODELS E6XX/E7XX)

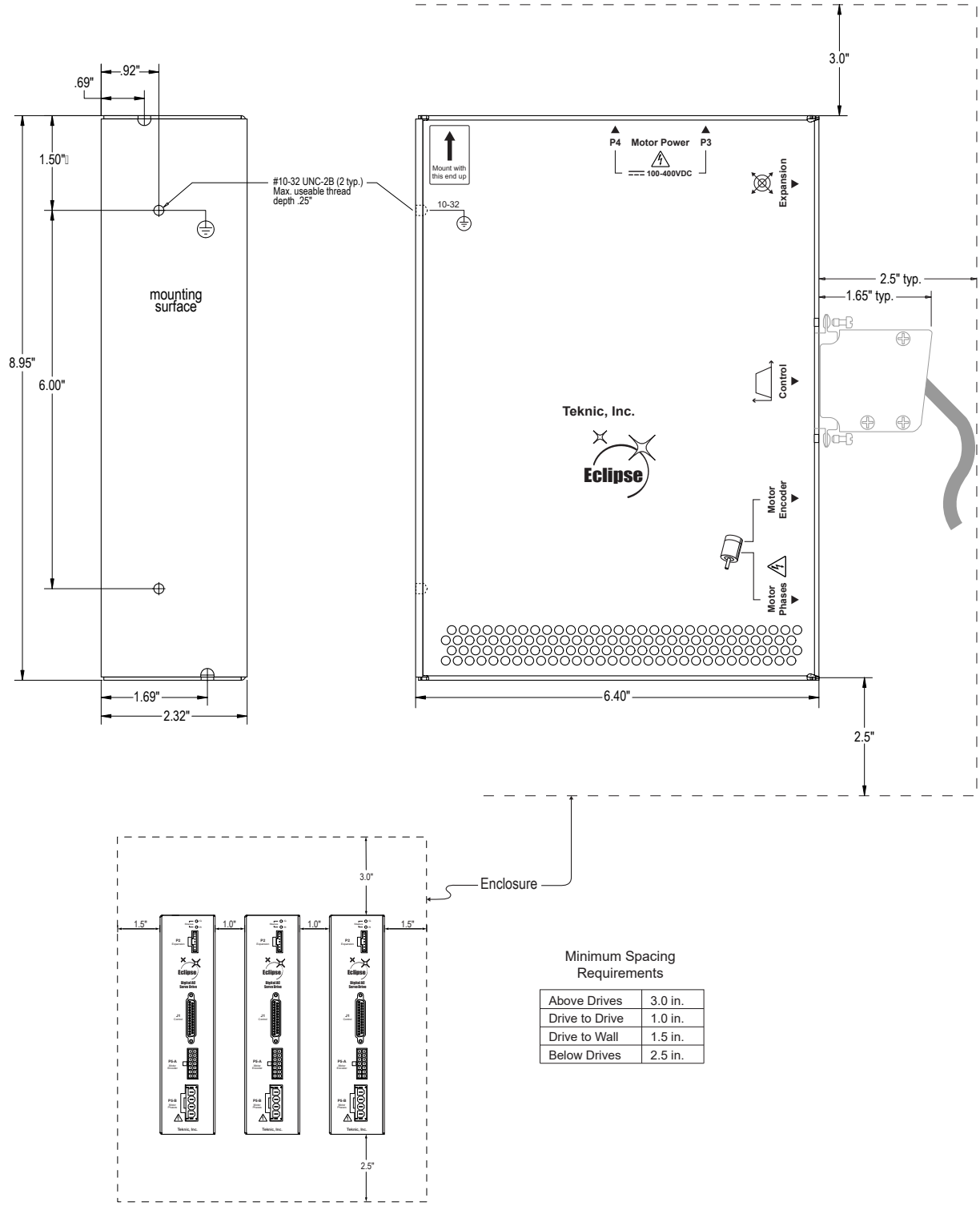

Mounting and clearance dimensions (E6xx/E7xx models)

NOTES ON ELECTRICAL NOISE AND GROUNDING

Electromagnetic Interference (EMI) can affect the quality and integrity of digital signals used in servo systems. One key to EMI suppression is to provide a low impedance RF return path between the motor case and the servo drive.

When using a third-party motor with your Eclipse servo drive, verify that the following conditions exist:

- The motor phase shield is bonded to the motor case.
- The motor phase shield is terminated at the motor cable connector. See appendix C and D for pinouts.
- The motor extension cable (if any) carries the phase shield all the way back to the drive.

Note! The Eclipse protective earth connection is made through the tapped mounting holes in the drive's case extrusion. See the mounting and clearance illustrations for screw hole locations and mounting hardware requirements.

Note! The drive mounting surface should be an unpainted, unanodized metal surface, metal cabinet, or metal backplane. The screws used to mount the drive should be electrically conductive (e.g. stainless steel or zinc plated steel). Never use anodized mounting screws. If the mounting surface is painted, a star washer or external tooth lock washer may provide sufficient electrical grounding. This should be verified by a qualified engineer or electrician.

ELECTRICAL INSTALLATION

Many time-saving and cost-saving details are presented in the schematic fragments and text that follow. Please read this entire section, as well as the “Golden Rules” found in Appendix B, before integrating SSt-Eclipse servo drives into your machine.

OVERVIEW: ELECTRICAL ISOLATION & GROUNDING

In order to prevent ground loops in SSt-Eclipse servo drive systems, the control ground, power circuits, and chassis are electrically isolated from each other.

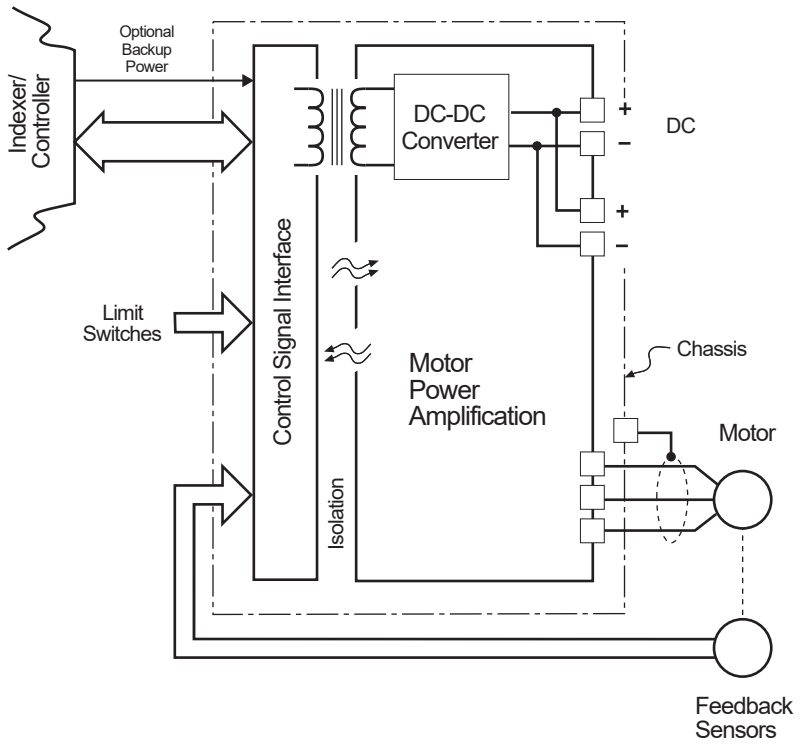

Electrical Isolation in the SSt-Eclipse

All of the control signals used by your indexer or controller are electrically isolated from the SSt-Eclipse's DC power input and motor output circuits as well as from the SSt-Eclipse's chassis (case ground). This design feature ensures that currents will not be induced into your control wiring by motor or power supply currents. You can even daisy-chain the power wiring to multiple SSt-Eclipses while using an indexer/controller without isolated control signals. Not only does this simplify your wiring scheme, it reduces your cost and increases the overall reliability of your system.

Note: Always maintain separation between the isolated control ground and power ground. See the “Golden Rules of Installation” for important details.

GROUNDING & SHIELDING RULES

In order to meet EMC emissions specification EN-61000-6-4, and EMC immunity specification EN-61000-6-2, as well as EMC electrical safety specification EN-61010 (for CE/UL compliance) the following rules must be followed:

1. The drive's Protective Earth Ground must be connected to the machine's safety ground, usually by mounting the SSt-Eclipse drive to a grounded panel or frame. These mounting holes are also the main RF ground for the unit and should be grounded to the machine frame to meet RF emissions requirements.
2. The motor phase cable must be shielded. The shield must be connected to the motor case (on the motor end) and to the CHASSIS pin on the drive's motor connector (see Appendix C and D). The shield lead length at both ends of the cable should be as short as possible with a 2.0" maximum length.
3. The encoder and commutation sensor cable must be separately shielded from the motor phase cable (even though the motor and encoder shields connect to the drive chassis) in order to prevent motor PWM noise from traveling through the encoder shield. The motor and encoder shields should not touch at any point. The shield for the encoder cable must be left unconnected at the motor end (don't connect it to the motor's case).
4. Controller wiring must be fabricated with shielded cable and the shields must be connected to chassis ground at both ends. Pin 1 on the controller connector (J1) and the connector shell are connected to the chassis for this purpose.
5. The motor must have both a low impedance ground path to protective earth and an RF path to the SSt-Eclipse. This is usually provided by the motor mounting screws and the machine's metal chassis.

Note: In cases where the motor is isolated from proper ground return paths (as with a "loose" motor during machine design, development, or construction) appropriate temporary measures should be taken to meet grounding requirements. Failure to do so can result in mechanical, electrical, and/or burn hazards.

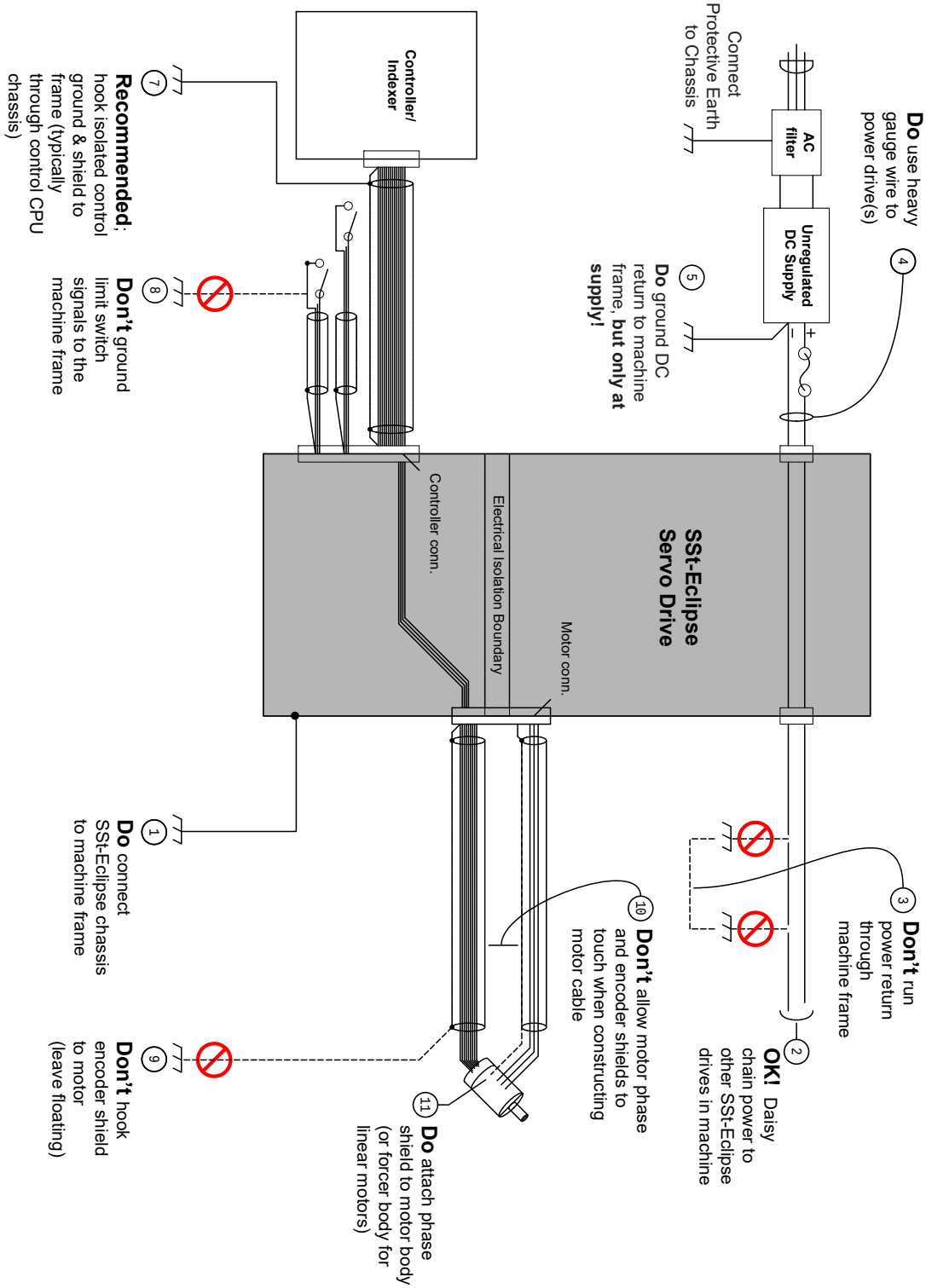

SSt-Eclipse Golden Rules of Installation [1]

[1] SSt-Eclipse 5xx series drive depicted. Not intended as a wiring guide. Refer to Appendix B and specific Eclipse model power supply section for important safety, wiring, and operating information.

CONTROLLER INTERFACE - CONNECTOR J1

All Eclipse control, communication, encoder feedback, limit, and I/O signals are accessed from connector J1. Eclipse servo drives can be commanded from standard digital step and direction positioning signals or a standard +/-10V analog command signal from a servo controller. The highest performance is generally achieved using digital positioning signals. This is due to reduced delays and superior coordination between the vector torque control and velocity/position control.

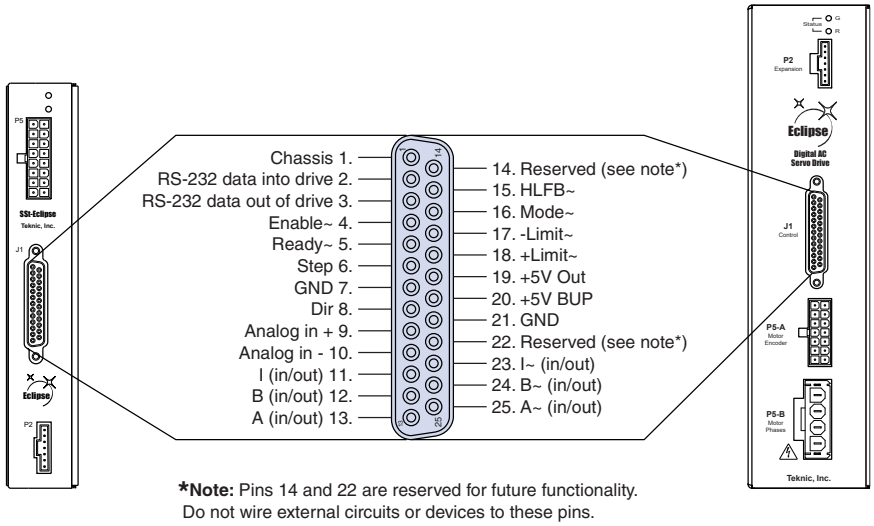

Controller connector J1 (all models)

THE SST-ADT-E ACCESSORY CARD

The SST-ADT-E card is a multi-function accessory card that mates with connector J1 on the SST-Eclipse drive. It is a DB-25 to DB-25 inline connector that passes-through all of the Eclipse J1/controller signals. The ADT-E is necessary for communication with the host PC through QuickSet. It also serves as a test and diagnostics tool.

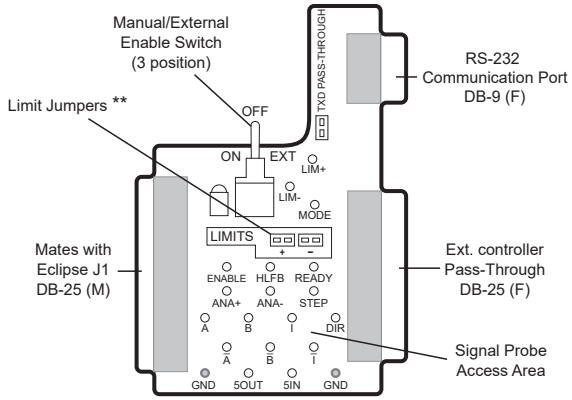

SST-ADT-E accessory card

The ADT-E card is described in greater detail in Appendix F. Relevant features of the ADT-E include:

- RS-232 communication port to link your Eclipse drive to a PC for file transfer and access to QuickSet utility software.
- A three-position Enable switch that allows you to manually enable or disable the Eclipse drive, or set to [EXT] to allow an external controller, connected to the ADT-E card, to control the Enable line.
- Breakout access to the Eclipse and controller signals for easy signal probing, troubleshooting, and diagnostic work.
- Limit Jumpers. These jumpers short the +/- limit switch signals to ground, preventing the limits from asserting. The Limit Jumpers allow you to manually assert either limit (or both) by removing the appropriate jumper(s). This feature can be particularly helpful during machine software development as it allows you to test and debug limit switch code without limit switches installed**.

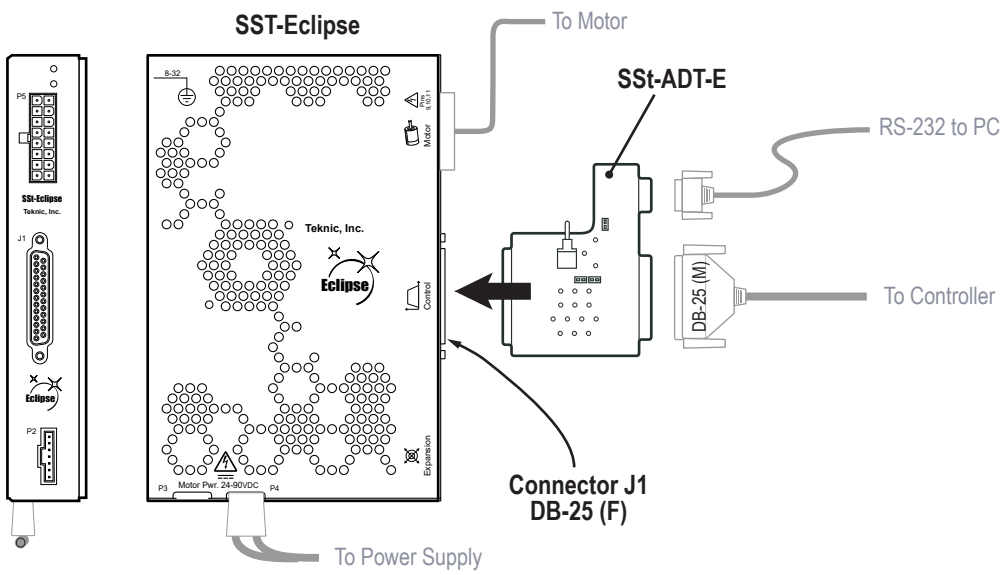

SST-ADT-E connects to the Eclipse at J1

Note: By default, the ADT-E card jumpers the + and - Limit signals to ground so they cannot assert. So, whenever a controller cable is plugged directly into connector J1—without an ADT-E card in between— the limit circuits must be either: 1) wired to functioning limit switches or 2) jumpered to ground through the connector. Otherwise, the limit signals will appear be “stuck asserted” and the drive will not function.

Note: ADT-E cards are intended for development, diagnostics, and communication. They are not designed to be permanently installed in production machines.

DIGITAL DRIVE INTERFACE

For the highest servo performance, the SSt-Eclipse drive should be run from digital position command signals from a servo controller or stepper motor indexer. The drive responds to standard, all-digital, step and direction signals, and returns high level (Boolean) feedback of move completion and tracking performance.

The following illustration shows typical connections from an SSt-Eclipse to a digital controller. The cable stock is a low capacitance, shielded, twisted pair type. The electrical properties of this inexpensive, readily available cable help minimize crosstalk and noise that can corrupt signal integrity, especially in longer cable runs.

For cable runs below 12 feet a readily available DB-25 cable[2] with straight through wiring can be used.

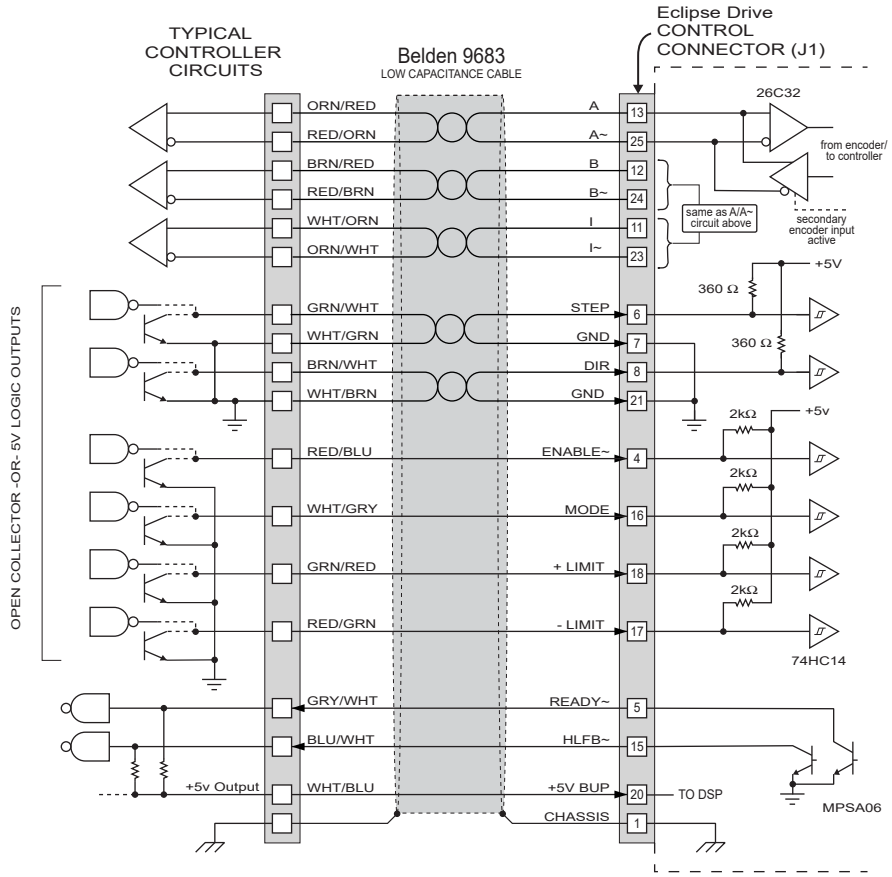

Typical Digital Drive Interface

SIMPLIFIED, HIGH RELIABILITY INTERFACE

In general, the majority of problems with electronic control systems in automated machines can be traced to interconnect problems. Low quality

[2] Eclipse users can easily convert off-the-shelf DB-25 to DB-25 M/M straight through cable into low-cost controller cables.

cables can carry electrical noise, exhibit significant crosstalk, or fail prematurely due to bad crimps and solder joints.

One way to make your machine more reliable is to use fewer signals if possible. Fewer signals translate to fewer conductors, fewer crimps, and fewer solder points that can fail in your control harness. This not only increases reliability, but also reduces cost and makes troubleshooting easier. But how can you reduce the number of signals you need?

The SSt-Eclipse helps you do this (in positioning mode) by providing the High Level Feedback (HLFB~) output signal, Limit Switch Homing, and HardStop Homing features. Such an interface is shown in the following illustration.

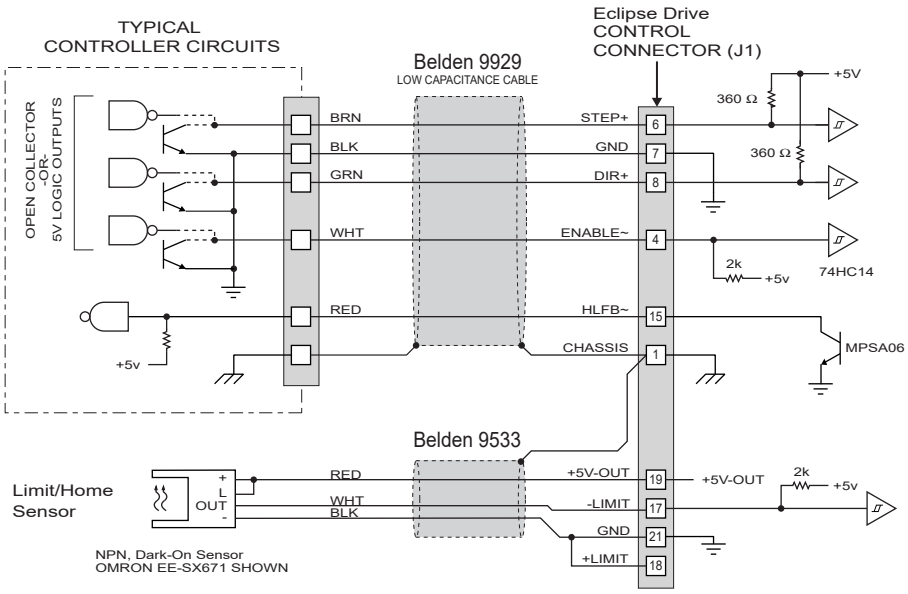

Simplified Digital Control Interface

Interestingly, one of the most important reliability improvements is achieved by *not* monitoring (nor wiring for that matter) high speed, noise prone encoder feedback signals to your controller. Instead of sequencing complex, multi-axis moves strictly off of encoder position feedback, the HLFB~ signal can be programmed to assert upon the completion of a move and thus can be used to elegantly sequence moves in your machine.

A simplified digital control interface, like the one shown above, can often eliminate the need for a separate breakout board as well.

OUTPUT CONTROL SIGNALS

Both the HLFB~ and the Ready~ circuits are open collector outputs with no pull-up resistors. They are rated for switching non-inductive loads up to 40V at a maximum of 100mA. These outputs are compatible with TTL and CMOS logic inputs when a pull-up resistor is used. They can also be used directly to switch non-inductive loads such as LEDs. If you wish to use these outputs with an inductive load such as a relay coil, you must connect a snubber diode across the coil to prevent the inductive spike from damaging the output transistor.

HLFB~ (HIGH LEVEL FEEDBACK) OPERATION

The **High Level Feedback** (HLFB~) signal is intended to provide rapid, high level Boolean feedback to your controller, thus reducing the software burden when your application is scheduling and monitoring moves. The HLFB~ signal can be configured in any of the following four modes:

- InRange~
- MoveDone~
- All Systems Go-MoveDone (ASG-MoveDone~)
- All Systems Go-InRange (ASG-InRange~)

Note: The "~" symbol is used to denote a signal that is active low.

The different modes of operation are described in the following text and timing diagram:

HLFB - MOVEDONE~

When the HLFB~ signal is configured to operate in MoveDone~ mode, it de-asserts at the start of a commanded move. The signal will assert when the command is complete and the axis has settled within a user-defined number of counts—about the target position—for a user-defined amount of time (usually in the low millisecond range).

The MoveDone signal is updated by the Eclipse DSP every 250µS and uses the measured velocity, acceleration, and jerk in a fuzzy logic algorithm to reduce false triggering. The MoveDone signal is most often used as a trigger for synchronization of events in point-to-point applications.

HLFB - INRANGE~

The HLFB~ signal can also be configured to operate in InRange~ mode. In this mode, the HLFB~ signal acts as a trigger to alert the controller that the axis under control has fallen out of a programmable position accuracy window. This mode is often used in CNC applications to indicate a worn tool and/or excessive feed rate.

Tip: The HLFB InRange~ mode can also be used to indicate unnecessarily slow feed rates in CNC applications as well. Implemented properly, this feature can provide the machine operator with a method for optimizing feed rate and maximizing throughput. Ask your Applications Engineer how to do this.

HLFB - ASG-INRANGE~

The ASG-InRange~ (All Systems Go & InRange) mode of the HLFB~ signal was developed to help minimize the I/O requirement of the SSt drive as, for example, when implementing the "High Reliability Interface". In this mode, the HLFB~ signal acts as a consolidated error/trigger signal that can be used in CNC applications.

In ASG-InRange mode, the HLFB~ signal is *de-asserted* (false/off/high) when one or more of the following conditions exists:

- The SSt drive is disabled
- A safety shutdown has occurred
- The SSt drive has lost bus power

- The axis has fallen out of a programmable position accuracy window.

This signal is *asserted* (true/on/low) only when a move is within the programmable position window (InRange) or when a move is complete and the servo drive is fully ready to accept a move.

HLFB - ASG-MOVEDONE~

In the ASG-MoveDone~ (All Systems Go & Move Done) mode, the HLFB~ signal acts as a consolidated error/trigger signal that can be used in point to point applications.

In ASG-MoveDone~ mode the HLFB~ signal is *de-asserted* when one or more of the following conditions exist:

- A move is underway
- The SSt drive is disabled
- A safety shutdown has occurred
- The SSt drive has lost bus power

This signal is *asserted* (true, on, low) only when a move is complete and the SSt servo drive is fully ready to accept a new move as shown in the timing diagram below.

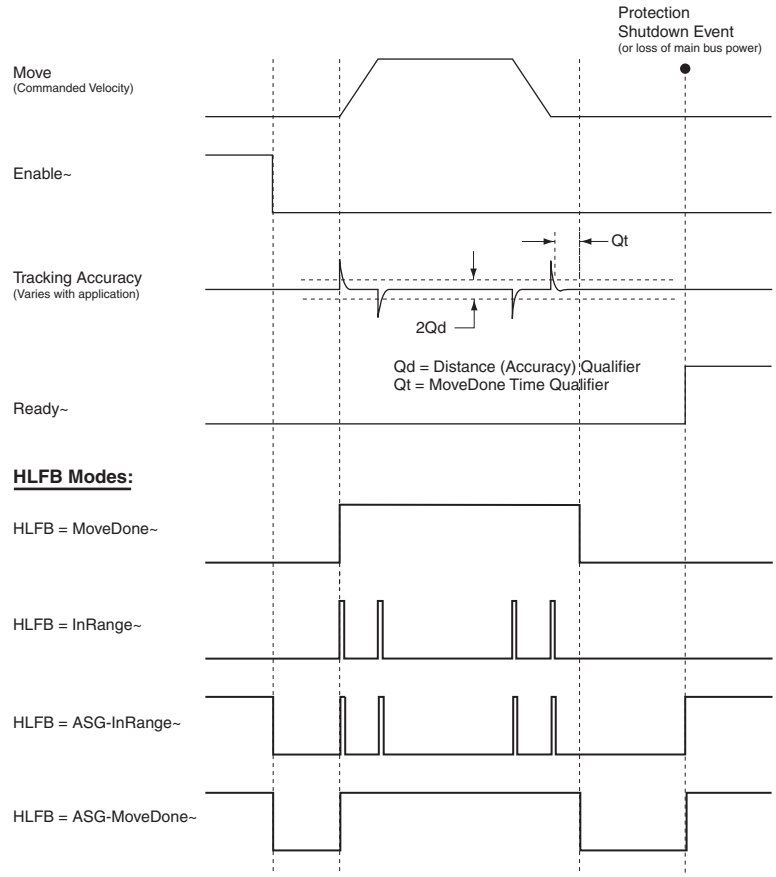

HLFB~ Timing: Showing different modes of operation

STEP & DIRECTION SIGNALING

Eclipse drives can connect directly to any stepper motor indexer or pulse source that uses industry-standard Step and Direction signals. The Step and Direction signals from the indexer should be open collector or TTL-level driven signals. Shielded wiring should be used for these signals (shielded, twisted pair wiring is preferred for the Step input).

Because Eclipse servo drives respond to Step and Direction signals of up to several megahertz in frequency, they will also respond to high frequency pulses generated by noise. *The most common source of spurious Step and Direction pulses is conducted noise caused when several digital signals share a ground path with the Step and Direction signals.*

Note: Ground the Step and Direction wiring directly to the controller/indexer card's output connector and *not* at a central system frame ground or other ground point. Using a breakout board can also be problematic because the cable between the controller/indexer and the breakout board typically shares the Eclipse's isolated control ground with other digital signals. This condition can induce noise into the Step and Direction signals. If you choose to use a breakout board, the cable running between the controller/indexer and breakout board should be kept as short as possible.

If your system exhibits symptoms such as "walking", drifting or repeatability problems, it is likely that the Step and Direction wiring is faulty or electrically noisy.

SETTING THE STEP INPUT FILTER

SSt-Eclipse drives feature a programmable Step Input Filter to prevent electrical noise from adversely affecting Step and Direction signal content entering the drive from a controller or indexer.

In order to set the Step Input Filter optimally, you should first determine the controller's:

1) **Maximum Step Output Rate -** The maximum frequency at which the controller or indexer will output steps to the Eclipse servo drive - for example 500 kHz.
2) **Minimum Step Pulse Width -** The width of the narrowest pulse that the controller/indexer will output - for example 1uS.

You can usually get this information from the controller/indexer manufacturer. The best way to ensure that the manufacturer's information is accurate is to view the Step and Direction signals coming from the device using an oscilloscope and an ADT-E card (see appendix F for details on the ADT-E card.

Tip: Many controllers/indexers do not output "perfect" 50% duty cycle step pulses, but many of them have adjustable step pulse duty cycles. Contact the indexer manufacturer for details.

Example: Setting the Step Input Filter

Let's say you have a 50 kHz (maximum) soft controller outputting digital Step and Direction signals to an Eclipse servo drive, and you need to set the Step Input Filter appropriately. We know the *Maximum Step Output*

Rate is 50 kHz, and we'll assume a 50% duty cycle (though this is not the case for all controllers).

In an ideal scenario, inverting the 50 kHz frequency, would give us a period of 20uS. We then divide by 2 to arrive at a 10uS *Minimum Step Pulse Width* (see figure below).

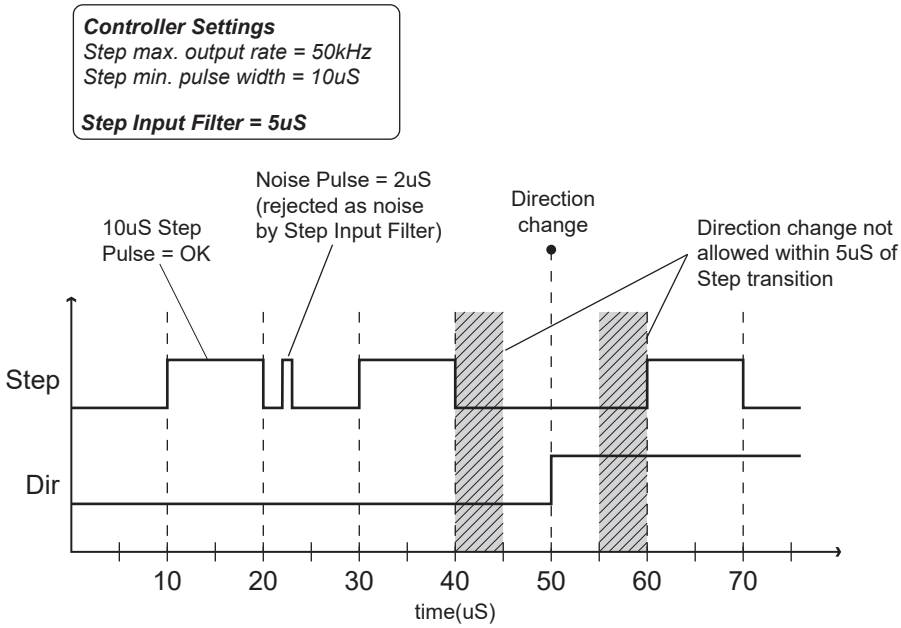

Example Step and Direction timing (Step Input Filter set to 5uS)

In this idealized example, the drive should never see a step pulse of less than 10uS. Knowing this, we would want to "throw out" any pulses less than 10uS wide. Doing so would effectively eliminate false steps caused by noise pulses on the Step line. In an ideal situation we would be able to set the filter to just under 10uS and be done. In reality, there are a fixed number of Filter settings from which to choose, so we select the best filter setting from the available choices.

To set the Step Input Filter, first navigate to the Inputs and Limits page of QuickSet, and select the Input Filter Setup dropdown menu. Here you will see several filter choices.

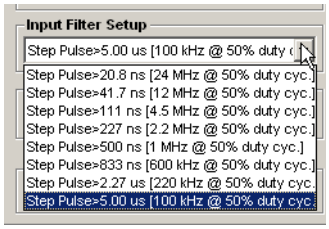

Step Input Filter settings

As it turns out, every one of the filter settings would technically work in this example. The best choice available is the 5uS filter. This setting would essentially ignore any Step pulses of 5uS or less, without interfering with true step pulses, which are 10uS in this example. This filter choice also allows for some duty cycle error as well as margin for pulse over-speed. If you selected a filter of shorter duration, such as the 111nS choice, you

would reject noise pulses of 111nS or less in duration, but you would allow noise pulses between 111nS and 5uS. So, for example, a 1uS noise pulse would get through the 111nS filter and be interpreted as a Step pulse.

The Direction (Dir) line is also affected by the Step Input Filter setting. With a 5uS filter setting, the Direction line should not be allowed to change state within 5uS of a Step line transition (see figure above). If you selected the 111nS filter, for example, then the Direction line should not change state within 111nS of a Step line transition.

DIRECTION POLARITY

The direction of motor shaft rotation is controlled by the state of the Eclipse *Dir* (Direction) line. Assuming that no Step Input Electronic Gearing[3] is used, and the step to count ratio is 1:1 the following is true:

When the Direction line is high (logic 1), each Step pulse will cause 1) the motor to rotate clockwise by one encoder count, and 2) the QuickSet position counter to decrement (count down by one). Note: This assumes that the step to count ratio is 1:1.

When the Direction line is low (logic 0), each pulse seen on the Step line will cause 1) the motor to rotate counter clockwise by one encoder count, and 2) the QuickSet position counter to increment (count up by one).

You can reverse the default direction of motor shaft rotation by selecting the *Reverse* checkbox in QuickSet's *Inputs and Limits* page; however, be aware that the encoder counter will *not* count in the reverse direction to match. If you need the encoder counter to track changes to the Direction state, you must either rewire the encoder or change your software to account for the state change.

Warning: If you select the *Reverse* checkbox in QuickSet to change the motor's sense of direction, you may need to rewire your limit switches or modify your machine software to maintain expected axis/limit sensor operation. Always test changes that affect motor direction at low acceleration and velocity.

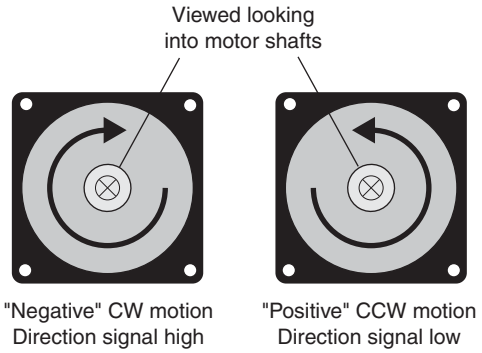

Direction signal vs. motor shaft rotation

[3]Step Input Electronic Gearing allows the user to specify the number of encoder counts to move per each step sent to the drive. This can be especially useful in scenarios where the indexer's maximum pulse output rate is less than the encoder's speed limit.

ANALOG COMMAND INTERFACE

SSt-Eclipse drives can be used with a traditional servo controller, as a high performance vector torque control or velocity control drive with a standard ±10V analog input. In this mode, the HLFB~ and the Mode~ pins are inactive and do not need to be connected. A typical analog interface to a controller is shown below:

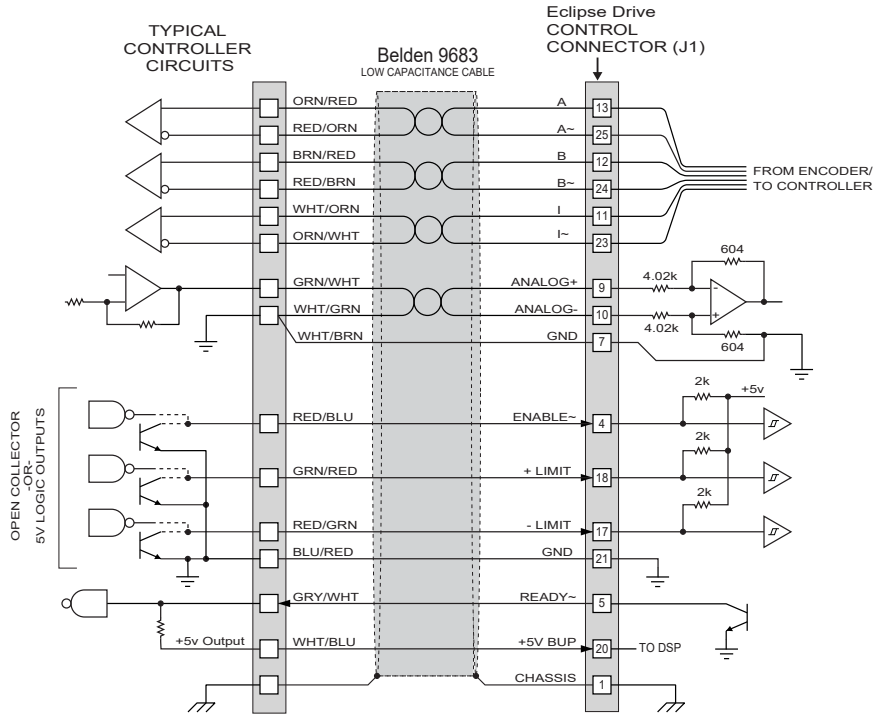

Typical Analog Command Interface

LIMIT SWITCH WIRING

There are two limit switch inputs on the controller connector. Normally closed (NC) switches are wired between the limit inputs and GND. Alternately, the limit switch inputs can be driven low by an open collector output or TTL level output limit switch. The limit signals can be wired directly to the SSt-Eclipse drive from the switches or they can be routed through the controller cable from the controller's interface board.

Note: If you are not wiring limit switches to the SSt-Eclipse drive, the limit pins (17 and 18) on connector J1 must be jumpered to GND (pins 7 and 21). Failure to jumper the limit pins to GND will render the drive inoperable as it will respond as though both limits are asserted.

The most popular limit switches are optical interrupt switches such as the Omron SX series shown below.

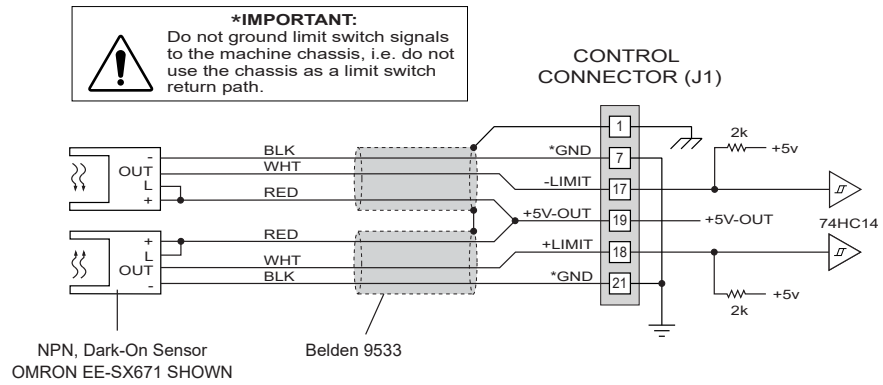

Optical limit switches wired directly to the SSt-Eclipse

Note: Never ground the limit switch signals to the machine chassis, i.e. do not use the machine chassis as a limit switch return path.

LIMIT SWITCH MODES

The limit switch inputs can operate in either **Torque Mode** or **Position Mode**. The Limit Switch Mode settings are found in QuickSet on the "Inputs and Limits" page.

Torque Mode (Force Mode for linear motors)

Note: *this mode is not commonly used.* When limits are set to "Torque Mode", and the axis hits a limit, torque to the axis is immediately cut off. However, the axis is still able to coast (or fall in the case of a vertical axis) as far as the commanded position, even if that position falls beyond the limit. In any event, the drive will log the commanded position as the starting reference position for any move commanded away from the asserted limit.

Position Mode

In Limit Switch Position Mode the Eclipse drive will actively servo to the position where the limit signal was asserted. So, if the axis is in motion and trips a limit switch, the following occurs:

1) The drive logs the position where the limit was tripped. This position becomes the new "commanded position".
2) The servo drive then actively stops the axis and servos to this new commanded position using up to 100% of its available torque.

Position Mode limits are very accurate, especially when used with optical limit sensors. In fact, Position Mode, when used to home an axis, can eliminate the need for separate home sensors and encoder index calibrations.

HARDSTOP HOMING

Teknic originally designed HardStop Homing as a means of emulating the crude method of stalling a stepper motor into a hard stop; however, use in numerous applications has proven HardStop Homing to be a very accurate and reliable way to home a servo axis.

In this user-programmable mode, the SSt-Eclipse detects the increase in torque that occurs when an axis [gently] hits a hard stop. The torque is then lowered (or "relaxed") to a user settable value while all remaining steps toward the hard stop are discarded by the drive. The axis is then gently held against the hard stop until commanded to move again. The first step away from the hard stop resets the drive's position register and restores the original torque limit. The axis must be able to tolerate repeated (intentional) low speed collisions[4] with the hard stop in order for HardStop Homing to be useable.

Tip! HardStop Homing can completely eliminate the need for limit switches or home sensors in many applications.

Note! Although HardStop Homing includes robust anti-falsing technology, in a few situations it can false trigger. To avoid this, the drive's Mode~ input can be used to inhibit (disable) the HardStop Homing functionality, *except* when the axis is actually in the process of performing a homing move. In order to use this "HardStop Inhibit" mode, the drive's Mode~ input must be wired to an output line on your controller.

POWER SUPPLY REQUIREMENTS (E4XX/E5XX)

The SSt-Eclipse requires an external DC power supply that can deliver high peak currents. Teknic recommends a "bulk" unregulated power supply (basically a transformer, rectifier and a large capacitor) for this purpose.

Switching power supplies are poorly suited to servo applications because:

- Switchers usually have the same peak *and* continuous-current ratings, forcing you to purchase a large, but under-worked power supply, just to meet peak current requirements.
- Most switchers are not designed to accept the regenerated energy that a decelerating motor pumps back into the power supply. This can cause a switching supply to power cycle, shutdown, or catastrophically fail in some instances.

The SSt-Eclipse takes DC input power at connectors P3 and P4. These connectors are wired in parallel, so you can plug the input power supply into either one. The power circuitry is electrically isolated from both isolated control ground (GND) and the chassis, allowing power to be daisy-chained from one SSt-Eclipse to the next, minimizing the size of the wiring harness without creating ground loops in the system.

[4] The collision speed must be individually set for each mechanical system. Contact Teknic if you have specific questions about using HardStop Homing in your OEM application.

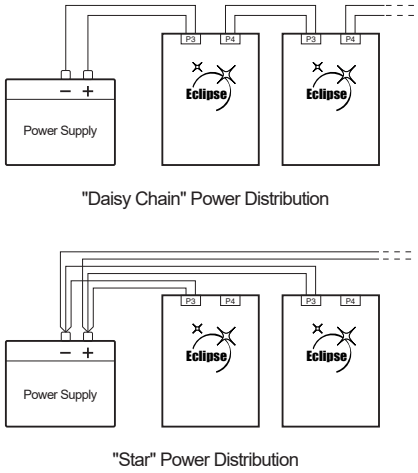

Daisy chain vs. star power distribution

POWER SUPPLY CURRENT REQUIREMENTS (E4XX/E5XX)

Current requirements vary widely and depend on the nature of the application. See Appendix G or your Teknic support team for information on sizing a power supply for your Eclipse 4xx/5xx system.

POWER SUPPLY REQUIREMENTS (E6XX/E7XX)

Teknic offers a power supply specifically designed for the higher powered Eclipse E6xx/E7xx models; the DSP-based **Amazon Intelligent Power Center[5] (IPC).**

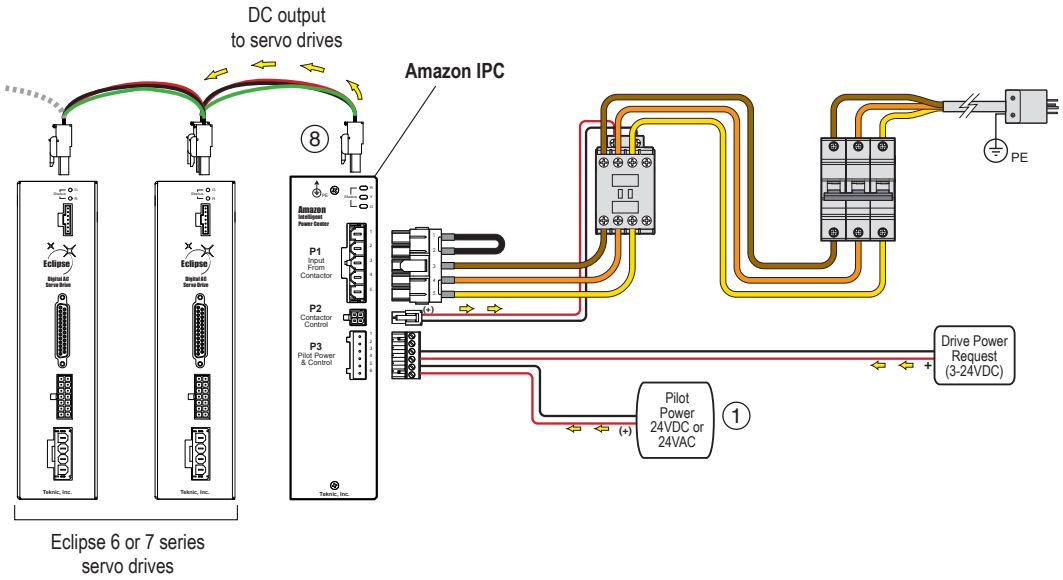

Amazon Intelligent Power Center (IPC) shown with Eclipse 750 servo drives

[5] See Amazon IPC Installation and Use Guide for complete safety and application information.

The Amazon IPC does more than simply supply voltage and current to Eclipse 6 and 7 series drives. The Amazon IPC was designed to help reduce up front design and engineering effort, improve system reliability, and reduce overall machine cost for our OEM machine builders.

Standard Amazon IPC features (all models) include:

- Multiple AC input voltages: Single phase 100-250VAC, three phase 100-250VAC, and 5-wire 380-415VAC
- Input contactor control
- Regenerated energy management
- Over-voltage/over-current detection and protection
- Reverse load polarity detection and protection

Optional features (advanced models) include:

- Input contactor safety monitoring
- EMI filtering
- Voltage droop detection
- Status outputs (3 total)
- E-stop interlock switch input
- Safety fault annunciation (siren)
- RS-232 configurable
- System event logs

Whether you need a basic power supply or a safety compliant power management system, the Amazon IPC can often replace the list of components previously needed to manage machine power at a lower total cost. Refer to the Amazon IPC user manual or your Teknic Applications Engineer for more information.

LOGIC POWER BACKUP (OPTIONAL)

If you lose main DC power to an Eclipse drive (as may happen during an E-stop for example) the following low power devices will also lose power:

- Eclipse internal 5VDC logic including DSP and communication.
- The motor encoder and commutation sensors (assuming they are powered by the +5VDC pin on the motor connector). The implication here is that any external device or software that relies on encoder or Hall effect feedback will lose it.
- Any other low power devices (e.g. sensors) powered by the "courtesy" +5VDC on the Controller Connector (J1 pin 19).

The power loss scenario described above may not pose a problem for your application, but if you need to keep the DSP, motor encoder, and other +5VDC devices "alive" in the absence of main DC bus power, you may choose to set up Logic Power Backup.

LOGIC POWER BACKUP (LPB) SUPPLY

LPB VOLTAGE REQUIREMENT

4.4 - 6.0VDC (as measured directly at connector J1)

LPB MINIMUM CURRENT REQUIREMENT:

To determine minimum current required for the backup supply, you can either:

1) Just select a **1A** supply (guaranteed to work but may be overkill).

or

2) Sum up the current draw of all devices that use the Eclipse's internal +5VDC "courtesy" supply and select your supply's minimum current based on that. You must budget for the following:

Eclipse internal logic:	**650mA** (Note: this is a fixed value that must be included in your current budget.)
Motor Encoder/Halls:	**TBD** - See motor data sheet (Note: This is125mA for all Teknic Hudson motors. Other motors will vary.)
Other sensors:	**TBD** - See sensor mfg. data sheet for current usage spec.

WHERE TO CONNECT LPB SUPPLY

Wire 5VDC backup supply to the +5V BUP pin (pin 20 on Controller Connector J1) and ground.

Note: Adjust the output voltage of the 5-volt backup supply so the voltage measured at the Controller Connector is 5.0V. Even if your circuit appears to operate properly without adjustment during initial engineering evaluation, you should adjust the supply voltage as indicated to avoid

potential problems caused by system variation and component tolerance stack up.

CONNECTING A MOTOR TO THE SST-ECLIPSE

OVERVIEW

SSt-Eclipse servo drives can elegantly control not only Teknic servo motors, but also most third-party motors, including brush and brushless servo motors, linear motors, galvos, voice coils, and more. The following section describes how to connect the Eclipse family of servo drives to both Teknic, and third-party motors.

CONNECTING TEKNIC MOTORS TO ECLIPSE E4XX/E5XX SERVO DRIVES (CONNECTOR P5)

Teknic manufactures a line of quality rotary brushless DC servo motors ranging in size from NEMA 17 to NEMA 34 frame sizes. Connecting these motors to the E4xx and E5xx series drives is simple, particularly if the drive and motor are mounted physically next to each other. In this case, you can just plug the motor directly into the drive.

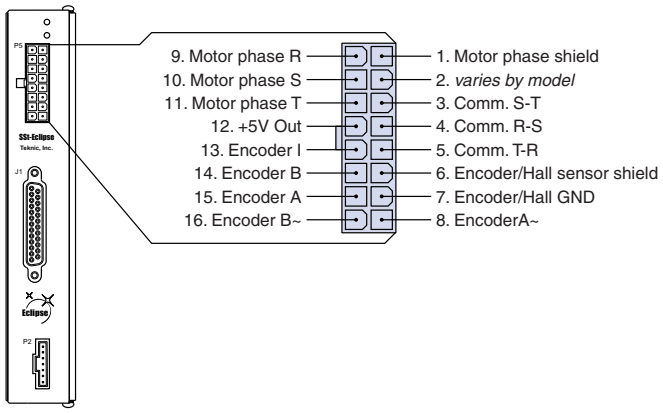

Motor Connector P5 (E4xx/E5xx models)

Tip: Poorly manufactured cables are responsible for the majority of failures in OEM automated machines.

CONNECTING TEKNIC MOTORS TO ECLIPSE E6XX/E7XX SERVO DRIVES

Connecting a Teknic motor to an Eclipse E6xx/E7xx servo drive is only slightly different than connecting a motor to the E4xx/E5xx drive. The primary differences is the motor cable.

1. E6xx and E7xx drives have two motor connectors on the drive. (one for the motor phases and one for motor logic signals) as opposed to the single connector on the E4xx/E5xx drives.
2. The wire gauge for the motor phases can vary depending on the output current of the Eclipse model you select. See your Applications Engineer for selection assistance.

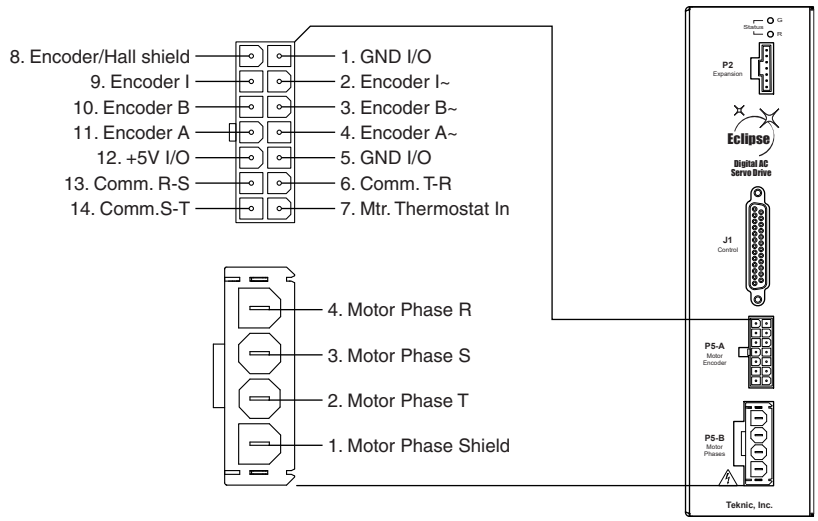

Motor Connectors P5-A and P5-B (E6xx/E7xx models)

CONNECTING TO THIRD PARTY MOTORS

The section below provides some basic details, schematics and important guidelines to follow when connecting a third party (non-Teknic) motor to an Eclipse servo drive. This section is also helpful for those tasked with designing and building your cables.

Sources are specified for both the connectors and the raw cable required in the diagrams below and in Appendix C and D (connector reference). The Belden cable products listed are economical and have excellent electrical properties. They are good choice for non-flex applications, but they are not appropriate for use in high-flex applications.

Several manufacturers, including Olflex, make cable products that are specifically designed and lab tested to withstand millions of flex cycles.

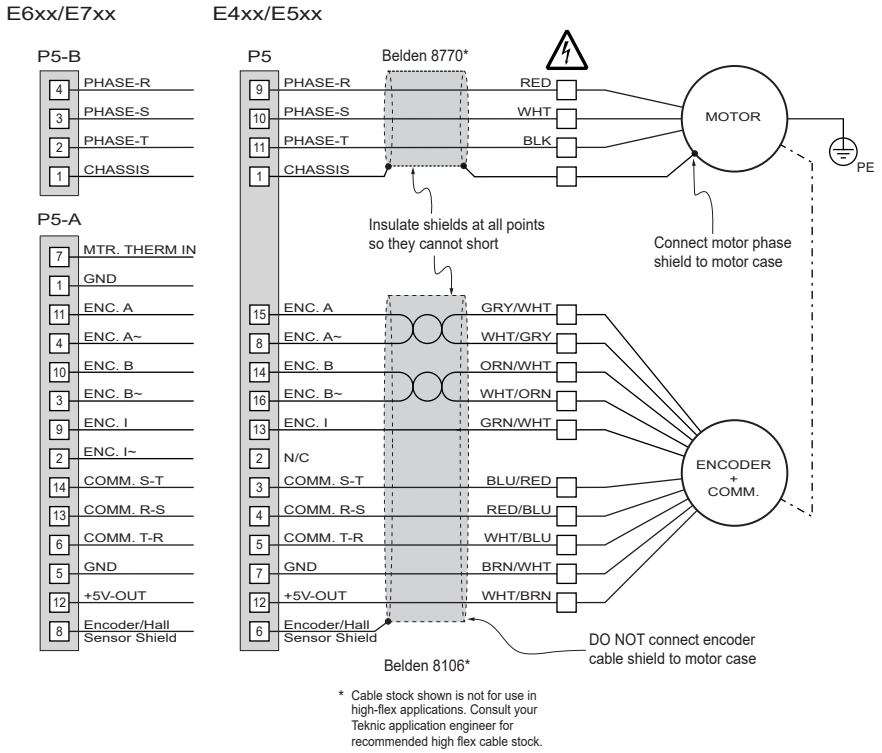

SSt-Eclipse Motor cable (balanced encoder)

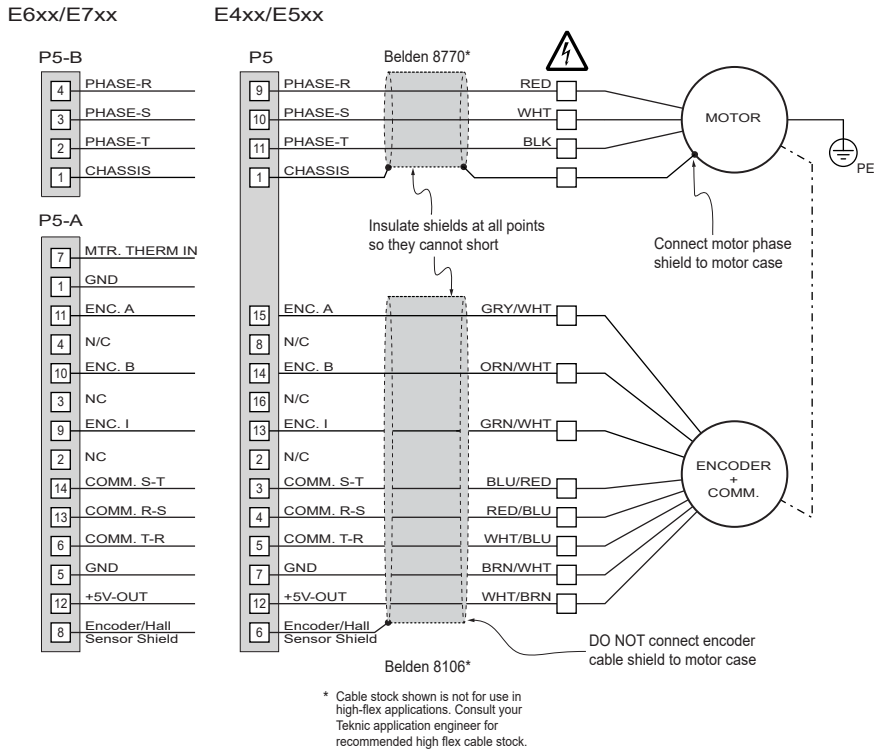

SSt-Eclipse Motor cable (single-ended encoder)

Note: Teknic motor pigtails are not designed for high-flex use. Always strain relieve the motor pigtail to prevent continuous flexing and eventual cable damage.

Tip: To date there is no standard naming convention for motor phases, commutation sensor signals, or encoder signals. What Teknic labels as "Motor Phase R", another servo company may label "Motor Phase X", or "Motor Phase B". This holds true of encoder signals and commutation sensor signals as well. Refer to Appendix H or contact Teknic for assistance with third-party motor connections for the Eclipse drive.

GUIDELINES FOR MOTOR CABLE CONSTRUCTION

Motor cables for SSt-Eclipse drives should be constructed according to the following:

1. Motor phase leads should be kept as short as possible after they exit the cable shield, preferably under 2".
2. The motor phase cable shield termination should be kept short at both ends, preferably under 2".
3. Use 16AWG or larger shielded cable for the motor phases.
4. Use low capacitance, shielded twisted pair cable for the encoder and commutation sensor signals, if possible.
5. Commutation sensor signals (Hall sensors) should be run in the encoder cable and NOT in the motor phase cable.
6. The shield on the motor phase cable must not come in contact with the shield of the encoder cable at any point. Cover exposed shield and drain wires with heat shrink tubing at termination points to prevent this. Failure to isolate these shields can result in loss of logic signal integrity and spurious failures and shutdowns.
7. Connect the motor phase cable shield to the motor case.
8. DO NOT connect the encoder cable shield to the motor case.

Warning! When connecting and disconnecting motors from Eclipse servo drives:

1. Always disable the servo drive before connecting or disconnecting a motor.
2. Verify that the proper motor configuration file is loaded in the servo drive before enabling it with a motor connected. This is particularly important if the configuration file currently loaded in the drive is unknown, or if you have connected a different type of motor to the drive.
3. **Always reset the servo drive after connecting or reconnecting a motor to it.** To reset the drive using QuickSet, select *Drive* > *Reset Drive,* or use the Ctrl+R shortcut, or cycle the drive power.

USING QUICKSET SOFTWARE

QUICKSET SOFTWARE SETUP

SSt-QuickSet (or just "QuickSet") is Teknic's servo system tuning and diagnostics software. QuickSet is a versatile and powerful tool necessary for:

- Communicating with Teknic servo drives
- Uploading motor configuration files to Teknic servo drives
- Adjusting the many drive/motor parameters and options
- Tuning servo systems via the internal move stimulus generator
- Accessing Teknic's software oscilloscope (Soft Scope)
- Analyzing and troubleshooting drive, motor, and mechanical system problems

This section covers the following topics:

- System requirements
- Downloading QuickSet software
- Installing QuickSet software

SYSTEM REQUIREMENTS

The minimum recommended system requirements for QuickSet software are listed below.

- PC running Windows 10, 11
- 1 GHz processor (or equivalent). ARM-based systems not supported.
- 1 GB RAM
- Serial port or USB port

DOWNLOAD QUICKSET

Download QuickSet software from Teknic's Downloads page:
https://teknic.com/files/downloads/QS%206.4.1.zip

INSTALL QUICKSET SOFTWARE

1. Unzip the QuickSet installation file using WinZip or another compatible file decompression program.
2. Run the Windows installer file QuickSet x.x_Installer .msi
3. When asked "Are you sure you want to install this software?" click ***Run***
4. Follow the on screen prompts to complete the installation

COMMUNICATING WITH THE SST-ECLIPSE

Once QuickSet software is installed on your PC, you can establish a communication link between your PC and Eclipse drive. This is done through the SST-ADT-E accessory card and a serial (RS-232) connection to the PC.

This section covers the following topics:

- PC to Eclipse communication hardware setup
- Configuring QuickSet to communicate with your PC

ECLIPSE COMMUNICATION SETUP

The diagram below shows an Eclipse servo drive connected to a PC for basic communication tasks. To link the Eclipse servo drive to your PC, the following hardware is required:

- **SST-ADT-E card -** This multi-purpose accessory card mates to the Eclipse at connector J1. It provides a DB-9 (female) communication port for interfacing with a PC. See Appendix F for a more comprehensive description of this device.
- **RS-232 extension cable -** This is a standard, readily available cable. The connectors are DB-9 to DB-9 (male to female) with straight through wiring.
- **High Speed USB Serial Adapter (recommended) –** This device has a standard USB plug to connect to the PC, and a standard DB-9 (male) serial port at the other end. **Use only *Keyspan (Part# USA-19HS)* USB High Speed Serial Adapter**, available through Amazon, CDW, and elsewhere.

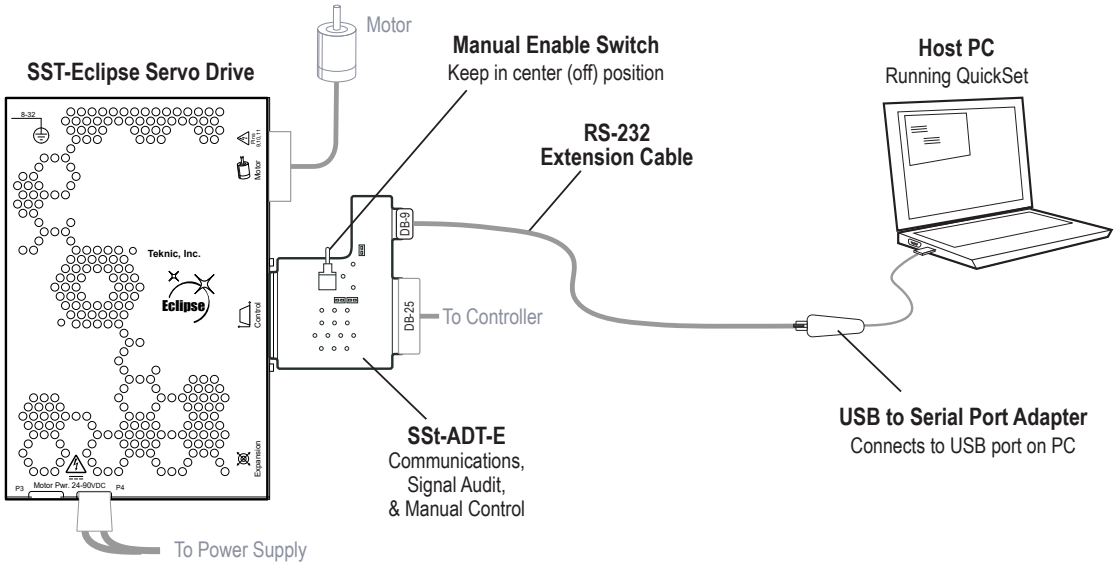

SSt-Eclipse servo drive ready to communicate with PC

Warning! Before connecting your PC to an Eclipse drive, set the Manual Enable Switch on the SST-ADT-E card to the "Off" position (refer to figure above). See Appendix F for a complete description of the SST-ADT-E board.

COMMUNICATION VIA DB-9 SERIAL PORT OR USB SERIAL ADAPTER

Connect Eclipse drives to the host PC via a USB-serial port adapter (recommended) or a direct DB-9 serial port. In a small percentage of installations, connecting directly to a serial port can be problematic due to existing hardware conflicts or driver issues. If you are connected directly to a serial port and experience communication problems between the Eclipse and host PC, a USB Serial adapter may be necessary. **Use only USB-serial adapter: Keyspan part# USA-19HS.**

CONFIGURING QUICKSET SOFTWARE FOR COMMUNICATION

Configuring QuickSet software to communicate with your Eclipse drive is a fairly simple matter. In some cases, the COM port setting in QuickSet (QuickSet defaults to COM 1 during installation) will match the physical COM port that the drive is plugged into, and no further changes are required. First, verify that following conditions exist:

- The SST-Eclipse drive is powered up.
- The SST-ADT-E accessory card is connected to the Eclipse at connector J1. Remember to set the Enable Switch to “OFF”.
- The RS-232 extension cable is connected to the ADT-E card and the PC serial port (or USB serial adapter).
- The PC is turned on and an updated version of QuickSet is running.

Note: If you are using a USB-serial adapter, plug it in to the PC *before* launching QuickSet. Otherwise, you must restart QuickSet to establish communication.

The screen shot below shows the main QuickSet window. In this case, the drive is online and successfully communicating with the PC on COM port 4.

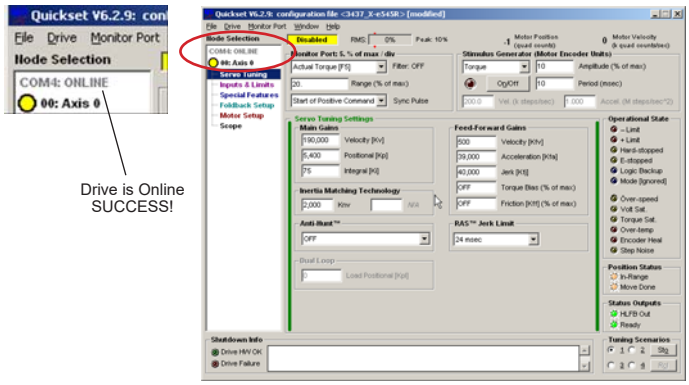

Eclipse drive is communicating (online) at COM 4

SETTING THE COM PORT IN QUICKSET

If you connected the Eclipse to the PC and found that the drive did not go online, follow the steps below to set the COM port in QuickSet.

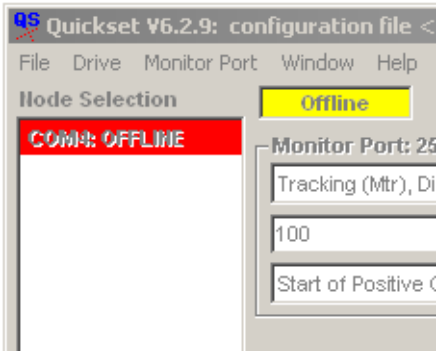

Eclipse drive (offline)

1) From the QuickSet menu, select *File* > *Application Settings*. The Applications Settings window will open.
2) Enter the number of the COM port that you plugged the Eclipse cable into. The software default setting is "1". If you don't know which COM port you are plugged in to, try them sequentially i.e. 1,2,3,4.

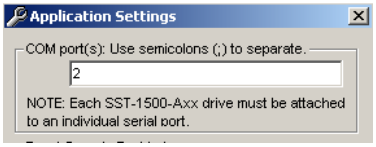

QuickSet Application Settings window

3) Click the *Done/Apply* button.
4) If you were successful, the drive will go online within a few seconds. Check for online status in the QuickSet main window.
5) If the drive does not come online, repeat step one and try the next COM port number in sequence. Repeat until online status is achieved. If you are still not successfully communicating, call your Teknic Applications Engineer for troubleshooting assistance.

UPLOADING A MOTOR CONFIGURATION FILE TO THE ECLIPSE

This section discusses the following:

- What a motor configuration file is
- How to load a motor configuration file into an Eclipse drive

WHAT IS A MOTOR CONFIGURATION FILE?

A **motor configuration file** is essentially a text file with the .mtr extension that must be loaded into the servo drive's memory before the drive can safely and reliably move a motor. The motor configuration file contains motor and drive parameter data including:

- Motor winding properties (resistance, inductance, back EMF, etc.)
- Motor encoder information
- Servo gains
- Safety settings

- Proprietary feature settings

Eclipse motor configuration files contain more than 50 variable settings accessed by the servo drive's DSP and advanced algorithms to position a motor with high accuracy and precision. Each drive/motor combination requires a "base" motor configuration file to work properly.

A **base motor configuration file** is a configuration file created for an unloaded motor, i.e. a motor with no mechanics or load attached to it. The base configuration file has most of the basic settings entered, but is not yet tuned for a particular machine's mechanical system.

Warning: The motor and mechanics may react unexpectedly if the wrong motor configuration file is loaded. Be sure that encoder density, pole count, gains, and other motor/drive parameters are set correctly before enabling or operating an Eclipse system.

LOADING MOTOR CONFIGURATION FILES

Before you can load a motor configuration file your PC must be running QuickSet and the Eclipse drive must be connected and online (communicating) with the PC.

1) In QuickSet select *File>Load Configuration File*.
2) Navigate to the location of the motor file. Note: Many base motor configuration files come standard with QuickSet software. They are located at [Drive]>Program Files>Teknic>QuickSet 6.2>Motor Files. From here, select the drive type (e545r for example), and then pick the configuration file of interest (for example: 2330-x-e545R.mtr).

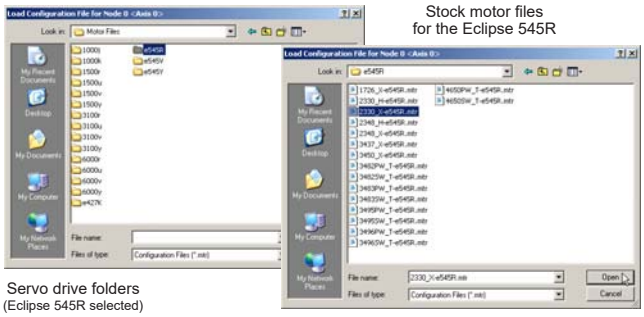

Motor configuration files (standard with QuickSet)

3) Click "Open" to load the motor configuration file into the Eclipse drive. This should take about 15 seconds to complete. "Receiving" will appear in the QuickSet status window while the file is loading.

LOADING THIRD-PARTY (NON-TEKNIC) MOTOR CONFIGURATION FILES

Eclipse servo drives can control many third-party (non-Teknic) motors including rotary motors (brush and brushless), linear motors, actuators, voice coils, and galvos.

- Refer to Appendix H for more information on third-party motor wiring and configuration.

USING THE SOFTWARE SCOPE

Teknic's latest improvements to the SSt-Eclipse servo drive family include many new features designed to reduce the cost and effort required to troubleshoot machine problems. Chief among these diagnostic enhancements is the integrated Software Scope.

Using QuickSet 6.0 or later, engineers and technicians can use the Software Scope tool to help configure servo gains, troubleshoot, and diagnose electrical, mechanical, and motion-related problems that occur during machine design and production. The scope uses real-time streaming data from the servo drive to create a dynamic picture of machine performance that goes well beyond simple servo configuration. For the purposes of this document, we will focus on using the Software Scope for servo tuning and performance analysis.

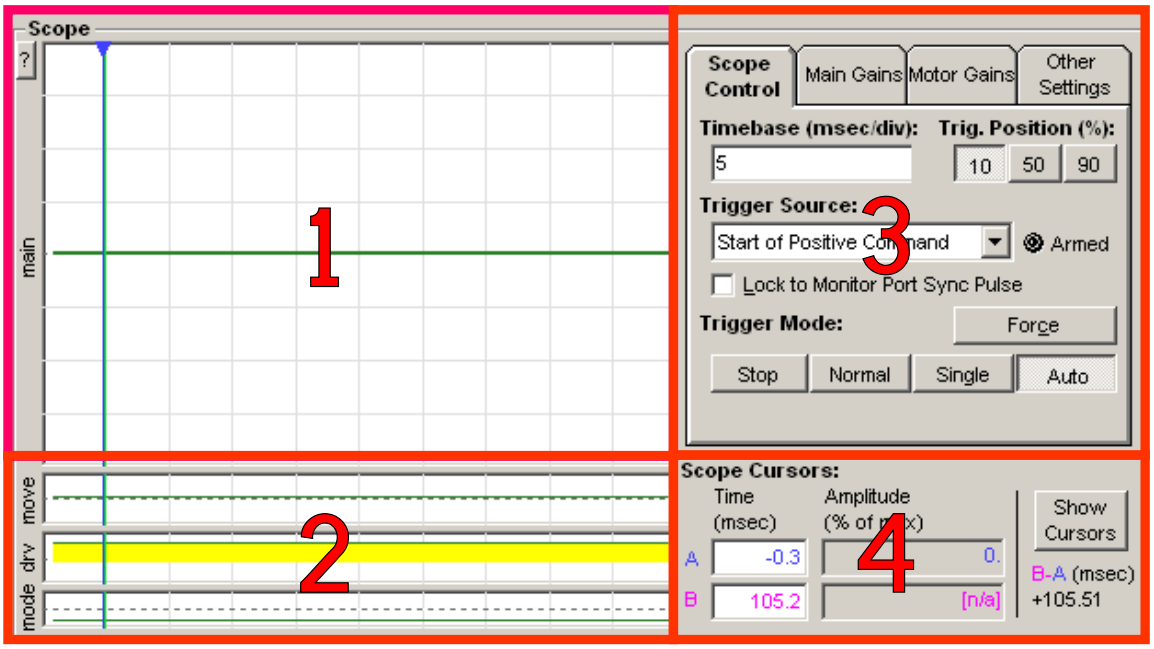

Scope display in QuickSet 6

The scope display has four main areas that will be discussed in this section:

1. Primary Display Area
2. Secondary Display Area
3. Scope/Drive Configuration Area
4. Cursor Display Area

PRIMARY DISPLAY AREA (AREA 1)

This is the main area of the scope display. Waveforms selected by the *Monitor Port* > *Variable* menu item (or drop-down list) are displayed here. The waveform is automatically centered on the screen. The scaling of this window is controlled by the Monitor Port "Range" variable.

Just outside the upper left corner of the primary display area is a button labeled with a question mark. This button launches a pop-up window

which is the legend for the secondary display areas. Any indicator displayed in this area is identified in the legend.

SECONDARY DISPLAY AREA (AREA 2)

The secondary display area contains three “strip charts”. These individual displays show specific information about the currently executing move, current drive status, and Mode~ line status.

The Move Status strip chart shows instantaneous status information for the executing move. This strip makes it easy for you to measure the move time by placing cursors on the rising and falling edge of the displayed waveform. It is also easy to see where the tracking error of the move exceeds the In-Range variable and where the drive is qualifying for MoveDone status.

The Drive Events strip chart shows the status of the servo drive at any point during the move. Any condition which would affect the behavior or performance of the servo system is indicated by a colored bar. Refer to the image below for specific messages that can be displayed.

The Mode~ Line State strip chart shows the state of the Mode Line at any point during the move. Note: the Mode Line may be used for any of several functions (gear shifting, torque foldback, HardStop inhibit, etc). this chart provides a convenient method to view display the state of this drive input at any point before, during, or after the move.

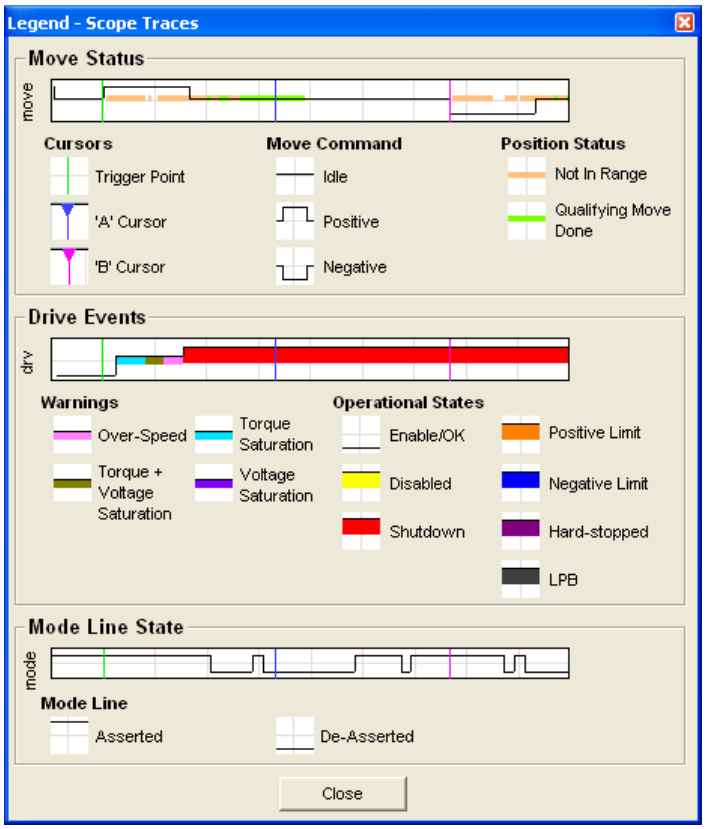

Secondary Display Area Legend

SCOPE/DRIVE CONFIGURATION AREA (AREA 3)

This section of the display features all of the scope controls and the primary servo configuration parameters as separate tabs. The tabs are as follows:

1. Scope Control
2. Main Gains
3. Motor Gains
4. Other Settings

SCOPE CONTROL

The scope control tab gives you access to common scope settings.

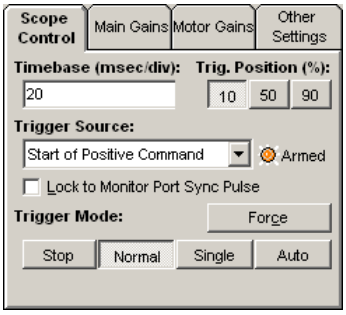

Scope Control Tab

The **Timebase** text box allows you to specify the scope display's time per horizontal division in milliseconds per division (mS/div). This lets you scale the waveform in the scope display as desired. For example, if the Timebase is set to 20mS per division, the entire horizontal range of the scope will be 200mS (20mS x 10 divisions).

The **Trigger Position** buttons allow you to position the trigger point on the left (10%), middle (50%) or the right (90%) side of the scope display grid. This is useful for viewing events on the scope that occur before, during, or after the trigger point.

The **Trigger Mode** buttons allow you to start or stop data acquisition, or choose to perform only a single acquisition. These controls are analogous to the trigger modes found on a digital storage oscilloscope.

- **Stop** – Causes scope data collection to stop. It does *not* clear previously captured data from the scope display area.
- **Normal** – Causes scope data collection to occur whenever a valid trigger source is detected.
- **Single** - Works the same as *Normal* mode, except it captures only a single data set when a valid trigger source is detected. After the single capture, data collection stops.
- **Auto** - This is the "always on" setting. Data is continuously collected, refreshed, and displayed regardless of trigger mode settings.
- **Force** - Clicking this button will force the scope to trigger instantly regardless of the presence of a trigger source. As in the Single mode, one data set is collected and displayed and data collection stops.

The **Trigger Source** selection provides the ability to control exactly how the variable selected will be displayed in the main display area. The following selections can be made:

If the Trigger Source is:	The Software Scope will:
Start of Positive Command	Trigger at the start of any positive move; useful for tuning
Start of Negative Command	Trigger at the start of any negative move; useful for tuning
Start of Any Command	Trigger at the start of any move (positive or negative); useful for assessing bi-directional tuning performance
End of Positive Command	Trigger at the end of any positive move; useful for assessing settling
End of Negative Command	Trigger at the end of any negative move; useful for assessing settling
End of Any Command	Triggers at the end of any move (positive or negative); useful for assessing bi-directional settling performance
End of Positive Settled Move	Trigger at the end of any positive move after move done criteria is met; useful for assessing settling performance
End of Negative Settled Move	Trigger at the end of any negative move after Move Done criteria is met; useful for assessing settling performance
End of Any Settled Move	Trigger at the end of any move (positive or negative) after move done criteria is met; useful for assessing settling performance
Voltage/Torque/Speed Limit	Trigger at the first instance of saturation (voltage or torque) or on speed limiting; useful for determining which moves (or segments of moves) exceed these thresholds
Drive Shutdown or Exception	Trigger on the assertion of an exception or safety shutdown; useful for determining the operational mode at the time of a fault
Mode Line Asserted	Trigger when Mode line toggles from “off” to “on”
Mode Line De-asserted	Trigger when Mode line toggles from “on” to “off”

MAIN GAINS

The **Main Gains** tab gives you access to the main servo gains as well as the most commonly used feedforward gains. This enables you to adjust the most important servo gains (during an axis or system tuning session) while simultaneously viewing the Software Scope.

Note: The Main Gains tab contains only a subset of the servo gains available in QuickSet. See the Servo Tuning page in QuickSet for access to the full complement of gains.

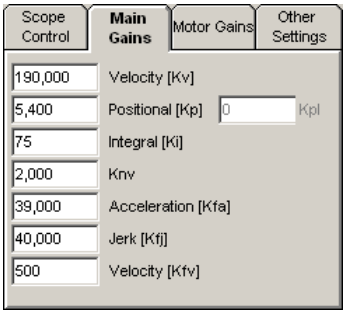

Main Gains Tab

MOTOR GAINS

The **Motor Gains** tab provides access to a subset of the motor settings as well as the torque loop tuning gains. The motor settings are locked by default and should be changed by experienced users only. The key combination CTRL+SHIFT+M unlocks these parameters for modification. These settings can also be accessed in the **Motor Setup** section of QuickSet.

Warning! Improper modification of the motor parameters may lead to instability and damage to the motor and mechanical system. Please contact your Applications Engineer for assistance with these settings.

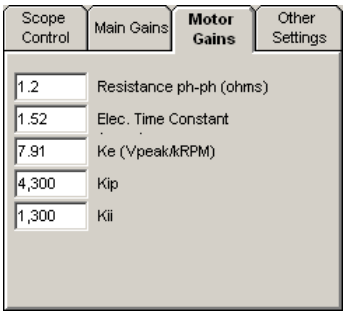

Motor Gains Tab

OTHER SETTINGS

The **Other Settings** tab gives you access to the user-definable MoveDone settings, specifically the In-Range Window and Verify Time components, as well as the Software Scope's Reference storage controls.

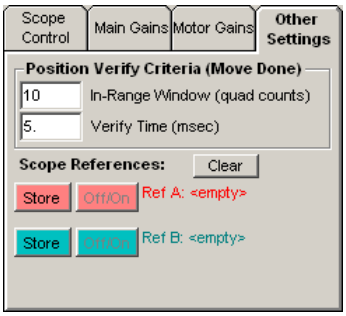

Other Settings tab

IN-RANGE AND VERIFY TIME: THE MOVEDONE CRITERIA

The In-Range and Verify settings, along with some advanced algorithms, define when a move is considered complete (or MoveDone in Eclipse language). For example, using the MoveDone criteria in the above figure (In-Range=10 counts; Verify Time=5 ms) consider the following example that describes when MoveDone is achieved:

1. A moving motor is commanded to stop (i.e. commanded velocity goes to zero).

2. The motor's encoder position falls within 10 counts of the target (or commanded) position. This satisfies the In-Range criterion.
3. The MoveDone Verify Time clock starts timing. The Verify Time criterion will be met only if the motor stays In-Range for 5mS (the Verify Time setting). During the Verify Time period, the encoder must remain within 10 counts of the target position and no new moves can be issued[6].
4. If 5mS is reached on the Verify Time clock, MoveDone criteria has been satisfied.
5. Once the conditions for MoveDone are met, the "Move Status" strip chart under the main scope display will change state. See "Secondary Display Area" earlier in this section for details.
6. If the HLFB~ (High Level Feedback) output is configured for MoveDone~ mode, the HLFB~ output line will change state (it will go [active] low in this case). See the HLFB~ Operation section for a detailed timing diagram.

SCOPE REFERENCE CONTROLS

The Scope Reference controls function much like the controls of a traditional storage oscilloscope. To save a waveform for later reference, press the "Store" button on Ref A or Ref B. An image of the waveform will appear in either pink (Ref A) or blue (Ref B). Once you have stored the waveform, you can overlay and/or store another waveform for comparison purposes. You can view three waveforms (Ref A, Ref B, and one "live" signal) simultaneously.

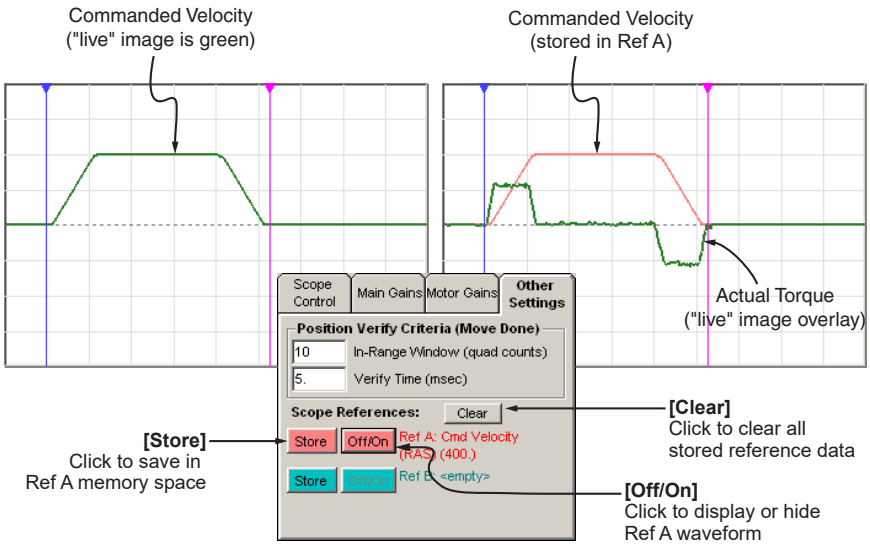

Scope Reference Controls on the "Other Settings" tab

[6] The MoveDone algorithm applies fuzzy heuristics that examine the tracking error trend before MoveDone can be asserted. This effectively prevents false/nuisance MoveDone assertions.

CURSOR DISPLAY AREA (AREA 4)

This area of the software interface has indicators to display the cursor positions in the main display area. Additionally, there are readouts to display the amplitude of the waveform at the cursor positions. The button provided in this section will bring cursors that may be off the main display into view. Finally, a difference calculation is provided to measure the time between cursor locations; this makes measuring move times and settling time easy.

ECLIPSE FEATURES, TIPS, AND TRICKS

INTRODUCTION

Eclipse servo drives incorporate highly flexible firmware features intended to help you:

- Achieve your machine goals for less
- Improve machine performance without increasing cost
- Simplify and speed up the production process

Thoughtful design and implementation of one or more of these features can yield significant cost savings and give your machine a notable competitive advantage.

This section is focused on the Eclipse features specifically designed to lower cost and improve machine robustness. The objective here is to provide you with a working understanding of these features so you understand what they are, how they work, and how they can add value to your application. Along the way we will provide explanations, tips and tricks to help you get the highest level of performance out of your Eclipse servo drives. Teknic support specialists are available to provide design analysis, detailed application notes, and technical support to help you implement the features discussed in this section.

Tip: In general, once an Eclipse feature is properly configured, the work is done. Duplicating these settings on subsequent [production] machines is simply a matter of loading the motor configuration file. In most cases the engineering is simplified and production effort is reduced.

FEATURE: LIMIT SWITCH HOMING

Typical reasons for use

- Eliminates dedicated homing sensors and related wiring
- Eliminates motor mechanical alignment
- Lowers cost
- Simplifies homing (eliminates controller routines)
- Improves homing repeatability

Description

Limit Switch Homing is a simple, inexpensive method for homing an axis with excellent precision and repeatability—without dedicated homing sensors, software, and ongoing maintenance costs. The setup involves changing one setting in the Eclipse drive and simply driving the axis into a limit switch at moderate speed, and then moving the axis a fixed distance away from the limit to the desired home position. The Eclipse firmware manages the necessary logic, leaving you with a straightforward software implementation.

Universal benefits

- Enables the use of lower cost indexers that lack encoder feedback inputs, even in machines that require state-of-the-art performance
- Allows for full-torque braking in the event a limit is accidentally triggered

vs. home sensors

- Reduces part count by eliminating dedicated home sensors and related harnessing
- Reduces software development time

vs. encoder index homing

- Eliminates the hardware and software to process encoder signals for the homing operation
- Eliminates software offset calibrations
- Reduces software development time

Use example

Scenario: You have a linear motor axis with a full stroke travel equal to 200,000 encoder counts and you want to use Limit Switch Homing to precisely home the axis. The machine has just powered up and the axis must now execute a homing routine before it can enter "operate" mode.

1. The software commands the axis to move toward the limit switch at a "safe" speed. In this case, a move of greater than 200,000 counts (e.g. 201,000 counts) will guarantee that the axis will engage the limit switch regardless of its current position.
2. The axis trips the limit switch causing the Eclipse to immediately stop motor motion and actively servo to the location where the limit switch was triggered. Note: optical limit switches generally provide the best performance in this type of application.
3. Any remaining steps commanded beyond the limit are discarded and the physical location - where the limit switch was triggered - becomes the new commanded position.
4. The software then commands the axis to move away from the limit to its home reference position. The axis is precisely homed, often repeatable to within one encoder count.

FEATURE: HARD STOP HOMING (SENSORLESS HOMING)

Typical reasons for use

- Home without sensors, switches or cables
- Eliminate sensor or motor alignment
- Achieve lowest possible cost of homing
- Simplify homing procedure
- For use when low cost and high reliability are paramount

Description

Hard Stop Homing is a simple yet elegant firmware-based method for homing an axis with excellent precision and repeatability—with no sensors. The implementation involves changing three settings in the Eclipse drive, testing the results, and refining the relationship in the three drive settings (which is typically about a ten minute, one-time effort).

Once the Hard Stop Homing settings are satisfactory, simply drive the axis into a hard stop at a "safe" speed. There is no stalling, no motor noise and no physical jumping. The axis clamps to the hard stop, the algorithm is engaged, and a user defined torque rollback is engaged in a time-controlled manner yielding very repeatable positioning. At that point, a command is issued to move the axis a fixed distance away from the hard stop to the home position, completing the homing routine.

Benefits

- Yields homing results that are precise and repeatable—often to within one encoder count
- Eliminates the cost, wiring, assembly time, maintenance and failure points of limit and home sensors
- Enables the use of lower cost controllers—specifically those that lack encoder feedback inputs—even in machines that require state-of-the-art performance
- Eliminates hardware/software that processes encoder signals for the homing operation
- Eliminates the need for mechanical alignment of home switches
- Reduces software development time by simplifying control software
- Reduces calibration efforts during the manufacturing process (sensor alignment, index mark alignment, and/or software offsets are eliminated)

Use example

The user in this example is running a linear motor axis with a full stroke travel of 100,000 encoder counts and wants to use Hardstop Homing to precisely home his axis. In this scenario, the machine has just powered-up and the user wants to home the machine for a new job. The following sequence of events would occur:

1. The control software commands the axis to move toward the hard stop at a "safe" speed. In this case, a move of greater than 100,000 counts (e.g. 101,000) will guarantee contact with the hard stop.
2. The axis approaches and makes contact with the hard stop. Axis motion stops. Note: steps 3-6 occur in a fraction of a second.
3. Servo error grows and the Eclipse drive (still holding position against the hard stop) responds by increasing force to the motor in an attempt to drive the motor to the commanded position.
4. When torque/force reaches a user-defined maximum level (e.g. 80% of total torque/force) the drive's HardStop Force Foldback algorithm is triggered.
5. The torque/force holding the axis against the hard stop automatically relaxes to a user-settable holding force over a user-

defined time period. For example, the holding force can be programmed to relax from 80% to 10% over a period of 100mS.

6. Any remaining steps commanded toward the hard stop are discarded. The Eclipse position register is reset, effectively making the current position (still snug against the hard stop) the new commanded position.
7. The software then commands the axis to move away from the hard stop to a known reference position. The axis is precisely homed with settling performance often repeatable to one encoder count.

FEATURE: VARIABLE LOAD AND INERTIA MATCHING TECHNOLOGY™

Typical reasons for use

- Eliminates production tuning, even with notable machine to machine variation
- Allows for high inertial mismatch enabling the use of smaller, less costly motors
- Allows for variable load weights without retuning with virtually no change in performance
- Compensates for mechanical wear over time, providing consistent performance over the life of equipment
- Controls overshoot, even with high integrator gains

Description

Inertia Matching Technology or IMT is a powerful adaptive control technique developed by Teknic to reduce or eliminate the overshoot and instability problems caused by variable loads and/or high load to motor inertia differences (a.k.a. inertia mismatch). The IMT neutralizes the impact of load weight variation, machine to machine variability, high load to motor inertia ratios on machine performance, and mitigates the effects of long term mechanical component wear.

In essence, this dynamic algorithm looks at all aspects of position and velocity performance and dynamically adjusts the gains on the fly to proactively adjust for predicted errors in either motion domain. The result is short-term performance otherwise realized with only with much larger (and more costly) servomotors, as well as long-term system compensation that even oversized motors can't match.

Benefits

- Reduces or eliminates overshoot induced by high integrator settings
- Adjusts servo gains dynamically to account for varying loads and machine to machine mechanical variation
- Improves settling times
- Enables the reuse of motor tuning files in production – eliminates the need to individually tune each axis as a production machine is built. This effectively makes the servo a black box to production.

IMT Background

Of course the ideal (read not realistic) servo axis would have a well-balanced, fixed load with a perfect 1:1 match between the motor inertia and reflected load inertia. It is well understood that maximum power transfer between motor shaft and load occurs when motor and load inertia are equal. Unfortunately, in the real world of design constraints, cost targets, and performance requirements, it is not practical (or possible for that matter) to build the "ideal" system. In developing Inertia Matching Technology, Teknic engineers first examined the problems associated with variable loads and inertia mismatch. The two main problems were identified as:

1. The excitation of low frequency resonances that effectively limit the usable gain of the servo system. Resonance control torque filtering is often used to mitigate this problem, either directly (with a digital low-pass filter) or indirectly (by adjusting the response of the torque controller).
2. Overshoot and system instability causing serious tuning and performance problems, unless the gains—especially the integrator gain— are set well below their useful ranges. This is especially true for axes with compliant or "lossy" mechanics. This problem has challenged servo system designers and users for years. Here's some background on how this problem typically manifests itself:

    > In a servo system, the function of the integrator is to drive steady-state position error to zero. In theory, the higher the integrator gain, the faster the position/velocity error is driven to zero and the greater the dynamic stiffness of the axis. In general, this is desirable behavior. However, prior to the introduction of IMT, servo designers who used integrator gain aggressively would always see axis overshoot in response to disturbances. This is due to the very nature of the integrator (i.e. the higher the integrator gain, the larger the overshoot). They would also find that by lowering the integrator gain - although they would lower the amplitude of the overshoot - they would increase the duration of overshoot and therefore the time to settle. So, an axis with less than perfect mechanics and/or significant inertia mismatch would very likely experience overshoot or stability problems unless the gains were drastically reduced.

The Historical Approach to Integrator Overshoot

Historical approaches to integrator induced overshoot include:

- Turning off the integrator until the very end of a move
- Limiting the maximum value of the integrator
- Setting a tolerance band within which the integrator functions

The main issue is that none of these techniques really solve the root problem; in fact, they often cause significant reductions in performance.

The most common, now dated, approach to dealing with overshoot and inertia mismatch is to spec an oversized motor, keep the primary feedback gains at moderate levels, and use very little or no integrator gain. Using this (literally brute force) approach, the motor sees so little of the reflected load inertia that it responds more like an unloaded motor (which requires

little or no integrator gain to maintain positional accuracy). Some obvious drawbacks to this approach include:

1. Larger motors are expensive. They drive up the machine cost, drive down profit, or both.
2. In many space-sensitive applications, an oversized motor is physically too large to satisfy critical design objectives.

Despite the drawbacks, the success of this “supersize it” approach has led to various questionable inertia-matching rules of thumb favored by servo system salesmen. These salesmen know that if they can sell the customer on oversized motors—instead of addressing the underlying problem—they will receive fewer support calls and take home larger commission checks from the sale of unnecessarily large and expensive systems. It’s a win-win situation for them.

Operation

Inertia Matching Technology is a standard feature on all Eclipse servo drives. It is one of the main tuning gains (Knv) set during axis tuning sessions. The IMT continuously works to eliminate overshoot caused by large disturbances while maintaining high dynamic stiffness.

The scope shots below display the response of an Eclipse servo system to an instantaneous [step] change in commanded position. The top trace is a well-tuned Eclipse system with a reasonable integrator value and no IMT. The lower trace, to those with servo experience, might look as if the integrator gain has been set to zero—in fact, it was increased by forty percent. The difference: IMT was turned on this time. Notice that the response is actually faster with no overshoot.

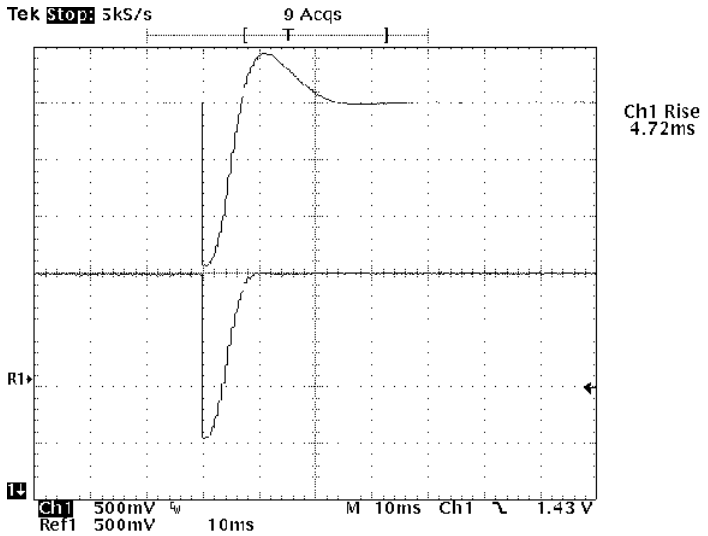

Servo response without IMT (top) and with IMT (bottom)

FEATURE: RAS FOR VIBRATION DAMPING AND ENHANCED SMOOTHNESS

Typical reasons for use

- Provides significantly smoother motion via double jerk-limiting command stream splining
- Improves tracking performance
- Reduces mechanical system wear (on items such as gearboxes and screws)
- Lowers motor and drive RMS (which provides more engineering margin or permits the use of smaller motors)
- Allows elegant use of lower frequency pulse output rate indexers (common among software based CNC controllers) or controllers that “burst” pulses

Description

Regressive AutoSpline (RAS) was developed to reduce machine vibration and shake, producing smooth motion even with less-than-ideal motion profiles. RAS works by automatically fitting a modified, high-order rational spline to the incoming digital command stream before it is passed to the position/velocity compensator. The duration of the RAS spline segment on the incoming profile is configurable using QuickSet.

Benefits

- Reduces wear on machine mechanics
- Lowers acoustical noise
- Causes less jostling of the load
- Minimizes ringing of the mechanism at the end of moves – this is especially important for trapezoidal motion profiles with linear acceleration ramps
- Improves tracking accuracy
- Reduces settling time
- Smoothes the torque signature resulting in cooler running motors. Some users even downsize to a smaller, less expensive motor as a result of using RAS

Operation

The RAS function effectively interpolates the incoming digital velocity profile and its derivatives at a high degree of resolution, providing extremely smooth inputs to the position/velocity compensator. These inputs, used in acceleration and velocity feed-forward calculations, allow the feed-forward gains to be turned up to optimum levels without creating the acoustical noise and torque chatter from which other digital servo drives suffer – the very reason why their use of feed-forward gains is limited to inadequate levels. (See the following screen captures).

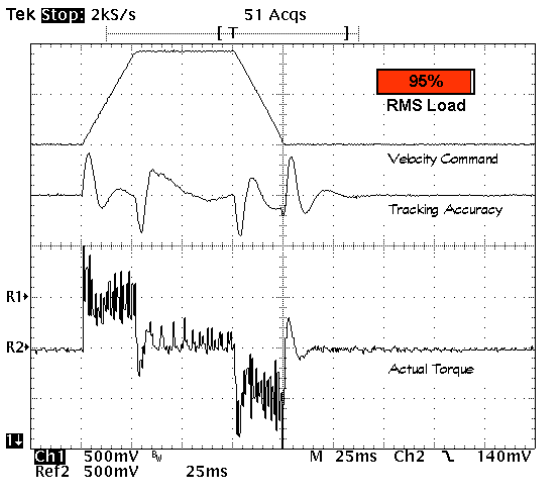

Figure 1: Commanded velocity, tracking error, and actual torque used without RAS

This scope shot (Fig.1) shows the commanded velocity (top: 3000RPM/div), tracking accuracy (center: 2 degrees/div) and the actual torque used (bottom: 25% of max torque/div) without the RAS engaged. Notice that the torque required during this move has significant "chatter". With 200 ms of dwell between moves, reciprocating this move required 95% of the motor's RMS capability.

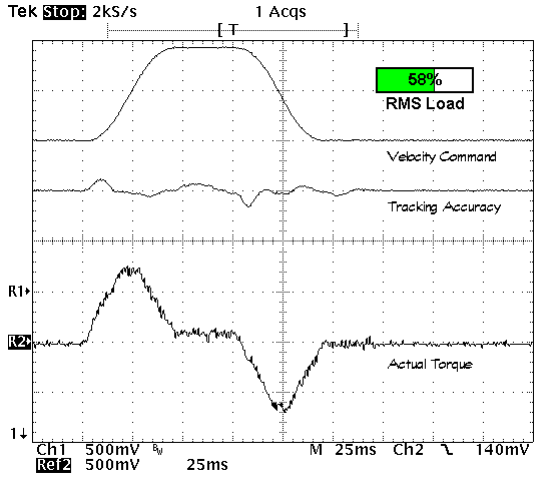

Figure 2: Same motion profile with RAS applied

The effect of the RAS on the same move's tracking accuracy and torque usage is dramatic. Notice the freedom from "torque chatter" when the RAS is engaged—this is one reason why the RAS makes motion so quiet. Also, the RMS load on the motor was reduced by 37%!

Other Benefits of RAS

When RAS is enabled you can achieve ultra-smooth motion with high top-speed capability, even from inexpensive controllers with low maximum pulse rates. Even when the Eclipse servo drive is configured for a low-resolution input (low number of steps per revolution) the RAS will generate a smooth, high-resolution internal profile for minimum noise and torque chatter. This is the main reason why Eclipse servo systems operate smoothly even when used with the pulse outputs from low cost

PLCs or “soft” parallel port indexers. This translates to a lower cost of control for the OEM machine builder.

RAS will smooth out step discontinuities or micro dropouts present in a controller’s velocity profiles. These problems are very common with in-house built step motor controllers that may be interrupted by other machine control functions or where the step generation algorithm was not completely perfected. When an Eclipse servo drive is presented with these less-than-perfect velocity profiles, it will fill in micro dropouts and smooth large step changes in speed, increasing the finesse of these profiles, and extending the useful life of your existing control solution and control software.

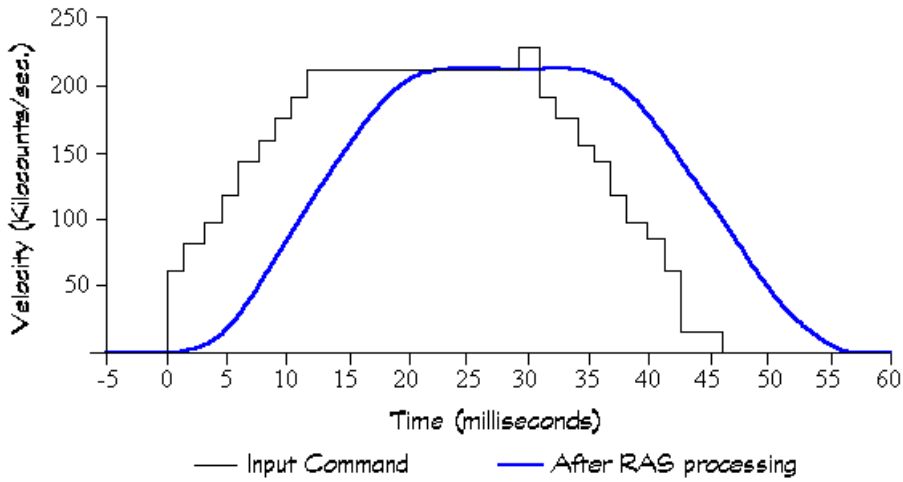

Figure 3: RAS smoothes step discontinuities in velocity commands

Notice that even this choppy input profile is transformed into an ultra-smooth move by RAS.

FEATURE: BUILT IN E-STOP FUNCTION

Description

The Eclipse drive offers an elegant, simple, and inexpensive alternative to controller-based E-stop handling. By changing a few drive settings through QuickSet, adding a mushroom switch and some minor wiring, you can create a fully functional E-stop circuit with user-settable emergency deceleration rate.

Benefits

- Inexpensive to implement - uses existing limit circuits
- User sets the deceleration rate based on application requirements
- No specialized hardware to spec, source, or purchase—just one switch
- No software to write; just hit the E-stop button and the drive takes over

Background

E-stops are traditionally handled through the controller, but not all controllers handle E-stops intelligently. When an E-stop is hit, some

controllers will simply kill the command to the servo drive while others abruptly remove power from the system allowing the axis to coast (or crash) to a stop. Neither of these approaches is optimal, especially when the axis payload is expensive, sensitive, or both. This forces machine designers to consider alternative, often costly, hardware and software based E-Stop solutions.

Operation

Wire a normally closed E-stop switch to the limit circuits so that both + and – limit circuits are simultaneously interrupted when the E-stop switch is hit. Important: the limit circuits must be opened within 80uS of each other (minimum) to engage the special E-stop mode. When the e-stop switch is hit, the axis decelerates to a stop at a user-defined emergency deceleration rate. There are several settings in QuickSet that allow you to customize the limit switch E-stop settings. It is important to note that when the drive enters this state it remains enabled (actively holding the stop position). To accept further commands the user must toggle the enable switch or reset the drive.

FEATURE: CONTROL SERVO HUNTING WITH ENHANCED ANTI-HUNT

Description

A common problem faced by automated machine builders and servo users in general is the performance and perception problems associated with servo hunting. Because the Eclipse is a high performance, inherently "quiet" servo product, the chances of encountering a true servo hunting problem is low, but under certain circumstances, hunting-like behaviors can occur. The Eclipse drive's Enhanced Anti-Hunt feature is a convenient, configurable feature that effectively reduces or eliminates the undesirable hum, buzz and micro motion caused by servo hunting.

Benefits

- Reduces axis acoustical noise during dwell
- Increases perceived smoothness of axis motion
- Allows for the use of high gain settings and high stiffness without typical servo jitter or hunting (so you don't need to sacrifice performance during motion to get the motor to sit still during dwell)
- No loss of accuracy is incurred when using Enhanced Anti-Hunt

Background

It is worth noting that a well-tuned Eclipse servo drive/motor system that is stiffly coupled to its load will not hunt. Servo hunting behaviors tend to occur in systems where the load weight and axis friction are relatively high and where there is backlash present (think inexpensive gearbox). When an axis that is nominally tuned to move a heavy load is commanded to stand still, the load and friction components change dramatically in a micro sense (mainly due to backlash in the gearing). Even a few arc-seconds of low friction "free motion" in the gearbox can cause buzzing and vibration as the drive actively seeks to maintain motor position within the relatively low friction confines of the gearbox's backlash zone. This means that,

during dwell when the load is essentially motionless, the motor may dither back and forth about the target encoder position.

In some applications—micro-probing of silicon wafers for example—hunting can easily disrupt sensitive probing operations. For other applications, such as CNC routers, imaging devices, and printers, hunting generally has no noticeable impact on machine performance or output, but the telltale buzz or hum from the servo motors can be perceived as a quality issue. In either case, it can be viewed as a negative by the end user or prospective customer. Enhanced Anti-Hunt can resolve this.

Operation

Enhanced Anti-Hunt is enabled through a simple checkbox in QuickSet software. Appropriate settings for this feature (including when not to use it) depend entirely on the motion requirements and objectives of the application. The exact appropriate setting for an axis on your machine is determined empirically and typically takes about 5 to 10 minutes. Consult your Teknic Applications Engineer for more information on the appropriate uses and settings for Enhanced Anti-Hunt.

FEATURE: PRECISION TORQUE/FORCE CONTROL FOR CLAMPING OR INSERTION

Description

There are many applications that require the ability to reduce torque (force) during a move. One example: an axis that must rapidly transport a part to a receiving socket and then reduce torque to properly insert the part into the socket and then hold the part in the socket with an exacting amount of force – all in the same profiled move. The Eclipse's Mode Line Torque Foldback feature can help you do this easily and inexpensively. To use this feature you must have a controller with at least one available output. This output, when wired to the Eclipse Mode Line input, allows you to engage or disengage this capability via program control.

The setting for the amount of torque applied during a Mode Line Torque Foldback event can be pre-set as part of the base configuration or you can change the torque/force setting on the fly to the current desired level via RS-232 communication with the drive.

Benefits

- Uses only limited controller resources – just one controller GPO
- Uncomplicated software implementation
- Eliminates the need for expensive load cells or other force feedback devices
- Torque limiting is directionally sensitive – you can set the Eclipse to limit torque in either direction (or both)

Operation

Settings for the Mode Line Torque Foldback (MLTF) feature are found in QuickSet on the "Torque Foldback" page. First, select the desired setting in the "Mode Line Foldback" drop-down menu, which indicates trigger type, torque direction(s) for active foldback, etc. Then, set the torque foldback value and the feature is ready to use.

To assert the Mode Line Torque Foldback, the control software needs only to pull the Eclipse Mode Line low via a control output. This activates the MLTF, instantly reducing the maximum allowable torque to the specified foldback level and only in the specified direction(s). To return torque to its default level, the control software must simply allow the Mode Line to return to "high" state. The software implementation is generally straightforward, and your Teknic Software team will provide guidance and support for MLTF in your application.

Use example

A part is being rapidly decelerated as is it approaching a test insertion dock. As it is being decelerated, the controller pulls the mode line torque foldback in the positive torque direction to "active". So full torque is still available to decelerate the load (negative torque direction) but it will not crush the part into the fixture (positive torque direction). As the part starts to insert into the dock, the velocity is now low. However, the part is commanded to go a small distance beyond the full contact zone and the part would otherwise get crushed. However, the Eclipse takes over and once torque is built to the user-specified level, the drive will continue to apply that exact amount of force on the part and no more. (The amount of force is typically the right amount of force to make proper contact for an accurate electrical test.) Thus load cells aren't needed and a precise amount of force is applied – even with parts of varying thickness. Moreover, when you start to pull away from the dock, full force is available in the retract direction – so move time remains maximized. So with a single output, users replace expensive and delicate force control devices.

FEATURE: GLOBAL TORQUE (FORCE) LIMITING

Description

The Eclipse drive includes an easy-to-set global torque (force) limit. This feature, set via the QuickSet application, allows you to specify the maximum (never to be exceeded) motor shaft torque (force for linear motors) for a given drive/motor combination. Note: if you use mode line torque foldback and set this foldback above the global force limit, the drive will use the mode line torque "foldback" as a force "fold up". This gives you have a mechanism to override the global force limit in a controlled setting. See mode line torque foldback for details on this torque over-ride mode.

Benefits

- Can reduce or eliminate accidental damage to sensitive mechanical components
- May enhance human safety by limiting torque/force to maximum necessary levels. Warning: even limited torque or force can be hazardous to humans. Never put body parts in the path of an active motion axis.

Operation

On the QuickSet "Inputs and Limits" page, set the "Torque Limit" field to a value between 0% and 100%.

Common use example

An OEM has a NEMA 23 servomotor that can produce 300 oz-in of peak torque when paired with the selected drive. A smaller NEMA 17 servomotor costs more money and is less robust, but the mechanics are only rated for 150 oz-in. We can set the Global Torque Limit in QuickSet to 50%, so torque at the shaft will be limited to 150 oz-in (50% of 300 oz-in). So we can use the less costly, more robust motor without causing risk to the mechanics. Note: in this use case, if more than 150 oz-in. of torque is needed to follow the command, the drive will be in a "torque saturation" state and may possibly issue a tracking error safety shutdown. However, the mechanical components will not be exposed to stresses beyond their rating.

FEATURE: REMOTE MACHINE TUNING AND SUPPORT

Description

One of the most versatile and convenient features supported by the Eclipse servo drive is the real time integrated software oscilloscope, or Soft Scope. The Soft Scope emulates the capabilities of a full-blown hardware storage oscilloscope from within the QuickSet application environment, so it's ready to go whenever your PC is connected to an Eclipse drive and QuickSet is running. Once you're connected, the Soft Scope can display (in real time) over 15 diagnostic servo waveforms including commanded velocity, actual torque, and tracking error vs. time.

The Soft Scope comes with many hardware oscilloscope features including adjustable cursors, adjustable time base, adjustable range, real-time display, two storage channels, four trigger modes, multiple trigger sources and positions. But the real value of this technology is that it lets you work collaboratively with a Teknic Applications Engineer from virtually anywhere in the world. As long as you have an internet connection, a Teknic engineer can work with you online – seeing exactly what you see. Anyone who's ever had to interpret oscilloscope images over the phone or wait for data to compile between each move will appreciate the speed and ease of the Soft Scope.

Benefits

- Enables remote support by Teknic Support Engineers
- Allows OEMs to support their machines in the field, regardless of location
- Useful for diagnosing not only the servo, but mechanical and electrical systems as well
- Allows you to easily capture, save, and compare benchmark machine performance data points
- Eliminates the need for an external oscilloscope
- Contains a full suite of scope controls that operate in real time, offering the convenience of an on-board scope but the speed and power of hardware scopes

Operation

The Soft Scope can be accessed via the "Scope" page in QuickSet. Please refer to the section "Using the Software Scope", for more detailed information on how to use the Software Scope.

FEATURE: I/O BASED AXIS COORDINATION

Description

The Eclipse HLFB (High Level feedback) output signal can be programmed to act as an I/O trigger that signals your controller when a desired performance state or condition is met. This signal is the basis of a robust, inexpensive move sequencing technique used in point-to-point applications as well as a mechanism to ensure accuracy in contouring applications. The HLFB signal is a multi-function digital output from the Eclipse drive that—when wired to an input on your controller—can be configured in several ways. (A complete description of the HLFB modes can be found earlier in this manual.) The HLFB signal can be programmed to:

- Tell you when the move has met its user-settable completion criteria and is expected to stay within the criteria. (This provides a predictive element that simply reading encoder position alone cannot.)
- Trigger when an axis is within an acceptable error band during motion (often used with CNC control systems to increase throughput or ensure part cut accuracy on-the-fly)
- All Systems Go–or ASG–(meaning that the drive is enabled and not shut down) is “anded” with move status allowing you to simultaneously understand the shutdown state, enable state and performance state of an axis with a single input line on your controller.

HLFB use example (as Move Done)

In this mode, the HLFB signal asserts when the MoveDone conditions are met. (The user defines the move done criteria.)

In this use example, a probe is set down to measure a parameter at a given wafer location. Any movement in the horizontal direction while the vertical is down would cause damage to the component. The horizontal axis moves into position. When the axis move is complete, the drive asserts the move output, allowing the controller to recognize move completion. The vertical then drops into position on the wafer, allowing the measurement to be taken with no “scratch” damage to the wafer. While this seems equal to monitoring the encoder, it is superior because:

- No noise-susceptible encoder lines needs to be run to the encoder (saves cabling and increase reliability)
- The algorithm sees the history and uses a predictive element to ensure the axis will not overshoot and is not ringing. This is more reliable than an encoder snap shot or series of encoder snap shots taken by the controller
- Simplified controller programming

General Benefits

- Move firing or tracking accuracy verification occurs via a digital output independent of encoder feedback to the controller
- Supports lower cost of control
- Reduces required number of controller inputs
- Signals are highly reliable digital signals

- Fewer wires = fewer possible points of failure

Operation

Refer to the Eclipse manual for detailed descriptions of these signals.

FEATURE: BRAKE SOLUTIONS

ROTARY INLINE BRAKES (HARDWARE BRAKES)

If your rotary motor application requires failsafe stopping power, an inline rotary brake may be the solution. Teknic can help you specify and integrate a brake into your rotary motor application. Your Teknic Applications Engineer will work with you to analyze braking requirements, create a brake specification, recommend a brake manufacturer and model, and support the integration of that brake into your machine.

Selecting an inline brake

In general rotary inline brakes should be:

- Failsafe, i.e. engage when main power is interrupted
- Installed to the output shaft of the motor, and not of a gearbox
- Have the lowest practical inertia

Brake tip

Most brakes do not produce as much clamping torque as the motor's peak driving torque, so always avoid actively driving the motor with the brake engaged.

BEMF BRAKES (ELECTRICAL ASSIST MOTOR BRAKING)

When power is removed from the drive, spinning motors become generators. If you electrically "clamp" that induced power, the motor will decelerate at an artificially high rate (vs. free-wheeling). There are effectively two ways to create an electrical assist brake. First, you clamp the DC bus. Second, you short the three motor phases together. If you are using an IPC (a.k.a. an Amazon) power supply with an Eclipse drive, the DC brake engages automatically if power is removed from the drives. This will have a noticeable impact on stopping distance compared to a free-wheeling motor. And it requires zero engineering effort to realize. The other choice is to short the three motor phases together. While this even further improves stopping distance, it opens the opportunity for significant noise issues. Please contact your Teknic Application Engineer if you wish to use phase clamping for specific instructions, relay recommendations and assistance. In any case, exact stopping distance depends on motor BEMF, mechanics, load weight, axis speed at which the power was lost, etc. On average, electrical clamping stops a motor in about two to three times smaller travel distance compared to free-wheeling.

FEATURE: AXIS POSITION RECOVERY

Purpose

The machine has lost power and the operator wants to recover position without having to re-home the entire machine. Eclipse drives have a position recovery feature for use with an incremental encoder that can replace the need for more expensive, lower bandwidth absolute encoders.

Axis position recovery vs. absolute encoders

From a value perspective, incremental encoders typically offer lower price, superior component reliability, and better bandwidth. So except in those cases where performance and cost are a good trade-off for a reduced number of unexpected shut-down induced homing events, the incremental encoder offers superior performance characteristics.

If not re-homing in the event of an operator unexpectedly killing machine power is paramount,

There are two general types of absolute encoders: “once around” and “multi-turn”. Once-around encoders provide the absolute motor shaft position (and therefore axis position) within a given revolution. But, if the motor exceeds one revolution—particularly during a power loss scenario—absolute position is lost. Multi-turn encoders, on the other hand, provide absolute axis position feedback regardless of number of shaft revolutions. Multi-turn encoders, however, require a gear system (which impacts component reliability and further increases cost).

Eclipse axis position recovery requires only an incremental encoder. This encoder (and the drive’s DSP) stays alive in the event of bus power removal, so the drive continues to monitor axis position. The system also retains the last commanded position at the time of power loss. The user has the ability to specify a position recovery window (i.e. how far the axis can travel before the drive does not engage position recovery). When power is returned, the drive automatically returns the axis to the last commanded position, as long as the axis remains within the user-defined position window.

Advantages

- Uses less costly, more robust, smaller, and higher bandwidth encoders
- Allows the user to determine the acceptable recovery window (not mechanically determined)
- Since it returns you to the last commanded position, no extra software coding is required to determine the location once drive power is returned
- Greatly increases the number of motor and encoder choices. (Virtually any motor is available with incremental encoders. Only a modest percentage of motors have absolute encoders.)

Disadvantages

- Compared to multi-turn, geared absolute encoders, the practical automatic recovery window is smaller than the range of the geared absolute unit. (Practical recovery distance is often comparable to a once-around absolute unit. However, if you have a once-around absolute encoder and more than one rev or travel, you never know for sure if you went beyond one turn. This uncertainty is not present with position recovery or multi-turn absolute encoders.)

- The position recovery aspect provides a fairly abrupt move. In some cases, it is better to have the controller command a move to return to the desired position.

Prerequisites

This feature can only be used on systems with Logic Power Backup installed. Please see previous sections on Logic Power Backup. In a nutshell it requires a 5V source and a wire (or trace in the case of a PCB design) present in the controller connector to bring external 5V to the drive.

Operation

A programmable position window is set. If bus power is lost and the axis has remained within the position window, when power is reapplied, the Eclipse will servo the motor to its last commanded position (before main bus power was cut).

Why does this matter? In the vast majority of cases, it really doesn't matter – you just home the machine and start from a fresh home. If that is two minutes per every 8 hours of operation, the impact will be invisible. But a few situations can make homing from an unknown start location considerably more time consuming or risky. For example, it can be difficult if the machine has interference points and you don't know where anything is anymore. Axes can collide if you've lost all reference to where everything is. With this feature all axes can get back to where they were prior to power loss assuming that they've stayed within the position window. And you can program a different position window for each axis as your needs determine. Moreover, if you are out of the window and the drive does not recover automatically, the controller will still know where you are – as long the encoder feedback is present. In 99% of the cases, it is Teknic's recommendation to use an incremental encoder and re home the machine in power-loss events. Use this features (or absolute encoders) only if a re-home is a true show-stopper.

FEATURE: LOGIC POWER BACKUP

Description:

All Eclipse drives support Logic Power Backup (LPB). LPB keeps the following Eclipse systems powered-up when main DC bus power to the drive is removed:

- DSP and associated logic devices
- Encoder
- LED indicators
- Serial communication (RS-232 circuit)
- Drive-powered accessories, such as limits

Operation and benefits

The 5V input pin on the controller connector is wired to a 5V supply of 750 mA or greater (to cover the drive with all accessories fully loaded). 5V can be "wired" in the form of an additional conductor in the controller cable or via a trace for PCB mount systems. Typically the 5V power within

the drive is derived from the bus. But when the bus is cut, the back-up supply continues to power key logic functions. This enables a number of benefits, such as:

- The DSP is kept alive, so the drive history and present situational awareness stays intact
- The encoders are kept alive, so feedback and current positioning data is not lost
- LPB enables the use of automatic position recovery mode
- The serial communication stays alive between drive and controller – including drive status data and the ability to modify key parameters.

Use example: location specific interference

An OEM has an X, Y, Z stage where the Z inserts up into a socket station in the center of the stage. If in the socket station, the Z must move down from the socket station before the other axes can commence motion. But if the Z is at or near the ends of travel of the X or Y, the Z must move up or it will interfere with framing under the stage. So knowing the location of each axis upon power-up is important to avoid mechanical interference. LPB lets the drive's logic and encoder "eyes" stay active even though main bus power is removed. This way you can recover gracefully without the cost and compromises of absolute encoders. (Please see Axis Position Recovery sections for other means to home a machine with interferences.)

FEATURE: ENCODER POSITION CAPTURE

Description

As the name implies Encoder Position Capture allows you to take a "snapshot" of your encoder position by applying a TTL level pulse to the drive's Enable line. Once captured, the encoder position value is stored in the Eclipse drive's memory where it can be accessed and used as a variable by the machine's control software.

Prerequisites

The Eclipse serial communication interface is required to use this feature.

Benefits and typical uses

- Accurate to the encoder count
- Works with axis in motion or stationary
- Can automate certain kinds of manual surface mapping and calibration procedures for:
    - touch-probes
    - image locating
    - fiducial locating at higher speeds
    - event recording, etc.

Operation

To capture the encoder position, initiate a TTL level pulse of between 1 and 100 microseconds on the Eclipse drive's Enable line. The encoder position value is instantly captured and stored in the Eclipse drive's

parameter memory. This value can then be accessed by your control software through the Eclipse serial communication interface. Pulsing the enable line in this manner will not effect the enable state. Additionally, the enable line is used so that the controller will not need to use an additional output, and the drive not need be burdened by an additional input. While generally used when enabled, this option can also be used while the drive is disabled.

Use example: Teach Location

An OEM wants to "teach" the controller specific encoder target locations on a production PCB that their machine evaluates - all while the axes are moving at a moderate speed. When the vision system recognizes the target (i.e. fiducial mark) the controller pulses the enable line of all drives involved, latching the exact encoder positions to create a 3-D map. While the machine continues searching for its next target, the application reads the encoder position of the previous one. This process continues until all targets are found and axis position locations are recorded. All future boards of this type can find these target locations at very high speed because the relatively slower vision processing system is removed from the motion equation. This improves throughput without the typical I/O and processing burden.

FEATURE: THIRD PARTY MOTOR SUPPORT

Many servomotor and drive manufacturers (somewhat understandably) discourage their customers from using competing motor solutions by designing their products with proprietary connectors, hardware, software, and feedback devices. Unfortunately, this tactic often limits their customers' choices to just a few motors in their line that come close enough to meeting the application requirements.

With this in mind, Teknic designed the Eclipse drive to be cross-compatible with motors from most major manufacturers (and many smaller ones, too). Simply stated, this gives our customers greater design flexibility. Though we'd like to sell you Teknic servomotors, the fact is if the linear motor, brushless motor, brush motor, galvo, or voice coil solution for your application isn't made by Teknic, Eclipse servos can almost always drive them (and often with better results than the motor manufacturer's own drive product).

Benefits

- Open-standard for motor control without proprietary roadblocks to prevent you from using other motors
- Teknic supports the widest range of third-party motor solutions
- Easily manage motor changes without extensive, costly rewiring
- Teknic Engineers are trained to assist you with simulations, selection and installation of third-party motor solutions. In fact, the growing motor library contains several thousand third party motors already simulated with Eclipse drives

Further Reading

See Appendix G, Wiring Third-Party Motors, for detailed information.

FEATURE: THROUGHPUT OPTIMIZER FOR CONTOURING MACHINES

Description and typical benefits

The Eclipse drive can dynamically track the performance of an axis to a user-defined acceptable error range. OEM's that utilize this utility can:

1. Ensure the accuracy of the machine output over the entire moving sequence in real time
2. Increase speeds if the machine is running more slowly than is necessary to maintain machine accuracy
3. Automatically reduce speed to preserve machine output quality

Setup

Using QuickSet, configure the HLFB (High Level Feedback) line for the "In-Range" mode of operation. Then set the In-Range value to an appropriate allowable error for the desired output. (Via the serial port, users can interactively change the acceptable amount of error to mirror current output requirements.) The HLFB is a drive output and does not necessarily require much, if any, controller programming.

Use example

A CNC router is cutting parts with a servo error tolerance of 0.002", which is input into the interface by the user prior to starting the job. Let's say this distance equates to 24 encoder counts. For a bit of margin, the controller sets the drive's In Range setting to 20 encoder counts via the RS-232 interface. As the unit begins to cut, the router will automatically increase the cut speed rate until the drive indicates an occasional tracking error of 20 counts or more. At that point the controller slows the feeds just a hair and completes the job at maximum appropriate feed rate settings. This machine will have optimized throughput and have parts cut meeting the accuracy specs with a bit of margin. OEMs that have used this feature have found the average user-defined feed rate error is about 25%. So this Eclipse feature automatically increased throughput or reduced feed rate to prevent a run of parts from being cut out-of-spec.

FEATURE: STEP INPUT ELECTRONIC GEARING

Description

Step Input Electronic Gearing lets you specify the linear or rotary distance that a driven motor will move for each step pulse sent to its Step Input line. (This is a function of the drive when in Step and Direction mode.) By default, SIEG is set to 1:1 (one count per step) but SIEG can be set to any positive integer value from 1:1 to 62:1 counts per step. For example, with SIEG set at 6 counts per step, each pulse on the Step line will cause the motor to move a distance of 6 encoder counts. Of course, the absolute distance traveled depends on the resolution of the encoder used.

Why use Step Input Electronic Gearing?

SIEG is generally used by engineers who want to achieve higher axis acceleration and/or peak velocity using a controller that has a lower-than-necessary step output rate. For example, a controller with a maximum step rate of 50 kHz (50,000 steps per second) has a correlated maximum velocity of 50,000 encoder counts per second. If you wanted to reach a

peak velocity of 190,000 counts per second using this controller, you could set SIEG to four counts per step. This increases the system's maximum velocity by 4 times (to 200,000 counts per second).

Caveats

While many other servos offer some form of electronic gearing, none has the dual advantage of Step Input Electronic Gearing combined with RAS. The Eclipse RAS (see earlier section) runs a 4th order spline through the incoming command stream. So instead of large distances per step creating significant velocity ripple, the RAS smoothes the command stream nicely, even with significant encoder-to-step ratios. However, the commandable resolution is reduced as the encoder-to-step resolution increases. For example, if you have a 5:1 step to encoder ratio, you can command moves to encoder counts 5, 10, 15, etc. but you can't stop at encoder count 7, 8, or 9. That said, accuracy is still determined by the feedback device. So while you can only command motion to every 5th encoder count, you will still maintain positional accuracy to within one count of the commanded position, regardless of encoder-to-step ratio.

Benefits

- Allows use of low pulse-rate controllers, such as soft controllers
- Offers repeatability and accuracy of the feedback device, not the pulse stream ratio (although command resolution is determined by the encoder to command stream ratio)
- Allows the use of aggressive digital filters in noisy environments – such as with plasma machines
- Supports burst mode (which allows for better "commandable" resolution). See next section in the manual for burst mode description

Feature: High speed and high resolution with low command output rates

Scenario: Some computer-based controllers or PLCs offer limited output rates due to concurrent demands on the main processor. This can effectively create a slow pulse clock. Electronic Gearing offers a convenient solution for reaching higher speeds, without sacrificing smoothness or creating extra audible noise, even with output pulse-rate limitations. The downside, however, is the commanded resolution drops. For example, if you have an output rate of 100 kHz but an encoder rate of 375 kHz at full motor speeds, you would set encoder-to-step ratio at 4:1. (That will give you a little headroom vs. 3.75:1 – see previous section regarding electronic gearing) While the servomotor will position accurately to the encoder count, you will only be able to resolve to every 4th count. So the resolution of your machine –if you want to realize full speed – is one fourth of what it would be with a one to one encoder-to-step ratio.

Mechanism 1: Eclipse drives allow for controller bursting enabling increased output rates and higher machine resolution

Some indexers—specifically those with a limited clock rate—can be made to issue command pulse "bursts", a mode that supports multiple steps per clock cycle. With other drives, you must carefully manage the pulse duty cycle to maintain smoothness of motion. This means using a mechanism that sends only one pulse per clock cycle and then varying the clock

frequency to control the velocity vs. time profile. Under this scenario the max clock cycle rate dictates the max pulse output rate.

The Eclipse drive can "packet" a group of pulses per clock cycle, allowing for a dramatic increase in effective max output rate. It works because the RAS runs a spline through the pulses, effectively spreading them between packets creating a smooth motion profile, as opposed to a burst of acceleration, followed by a dead space, followed by a burst, and so on. The advantage of this mode is that you can dramatically increase the pulse output rate, allowing you to recover resolution without sacrificing speed or smoothness.

Mechanism 2: Eclipse drives allow for on-the-fly electronic gear shifting.

In cases where you can't tell the controller to enter burst mode, the drive allows you to change the encoder-to-step ratio programmatically via the drive's Mode input line. This is particularly beneficial in cutting or marking applications where operational processes occur at markedly different rates than rapids. With this system, you run at a lower encoder-to-step rate when cutting or marking. Then, when you want to perform a rapid, you hit the gearshift output on the controller and a new encoder-to-step ratio is engaged – giving you a higher max speed during the rapid than at cutting speeds. So you can have both good cutting resolution and fast rapids even with a low pulse-output rate device.

Note: If you are considering the use of Electronic Gearshift, it is critical to properly account for (in software) the change in distance per commanded step that occurs whenever the electronic gear ratio changes. Also, be aware that a brief pause between commands is required to ensure the gear shift "locks in". In most cases the time required for the gear shift change is masked by other operations (e.g. parking a cutting bit before initiating a rapid move).

Other Benefits

- Offers repeatability, accuracy and the resolution of the feedback device
- Removes much of the PC to PC variability normally associated with PC-based controllers
- Can lower the demand on the PC (depending on the controller)
- Improves edge quality when run at very low speeds on cutting machines

FEATURE: DIGITAL NOISE FILTERING

Description

The Eclipse drive offers user-settable digital filtering on all logic lines, including the command stream and encoder signals. These custom-designed algorithms remove unwanted noise frequencies while allowing the desired signals to pass. Combined with the galvanic isolation between power stage and logic stage (common to all Eclipse drives) digital filtering allows for the use of standard, off-the-shelf encoders and command systems with no extra electronics (ferrite beads, chokes, capacitors, etc.). This is true even in highly EMI noisy environments, such as those with plasma cutters in close proximity. Once properly set, the filters load as

part of the drive's motor configuration file and become invisible to production personnel and machine owners alike.

Benefits

- Eclipse digital filtering removes unwanted noise, allowing robust performance in [electrically] noisy environments
- Eliminates the need for traditional add-on filter methods, such as capacitors, ferrite beads, chokes, etc. that increase cost and manufacturing effort while having some negative side-effects (such as attenuation of control signals)
- User definable
- Except in plasma or other similarly noisy applications, digital filtration is rarely needed (mainly because the drives are fully isolated). Machines that normally do not need this filtering (ranging from CNC routers to IC test handlers) will benefit from a belt and suspenders level of robustness as the filter will kick in if an unexpected event—the loss of a ground connection during operation—happens. In such a case, the machine will keep running, even as the control system is alerted to the fact that the Eclipse's digital filtering has activated and that maintenance or repair may be necessary.

Operation

In a nutshell, after the noise and actual command stream is evaluated, the proper filter is selected from a drop-down window. Once it is set, the filter becomes part of the configuration file and all future machines will have the filters automatically set via the drive's motor configuration file. It takes about 15 to 20 minutes to evaluate the prototype machine's process noise. Contact Teknic for a procedure to evaluate the typical noise frequencies and filter settings for your prototype machine.

APPENDIX A: SST-ECLIPSE SPECIFICATIONS

SSt-E427 Specifications		
GENERAL	Dimensions, in (mm):	7.31 (185) x 4.876 (124) x 1.156 (29)
	Weight, oz (g):	17 (494)
ENVIRONMENTAL	Temperature:	0-40°C
	Humidity:	0-90%, non-condensing
COMPLIANCE	Electrical safety:	EN 61010, UL508C
	EMI:	EN 61326
	Machine safety:	EN 954-1, with proper power control
	RoHS	RoHS Compliant
OUTPUT POWER	Peak Current:	20A
	Continuous Current:	6A
	PWM ripple frequency:	28kHz, center balance vector type
	Conversion Efficiency:	>99%
COMPENSATOR	TSPD:	35 µS
	Position/Velocity control:	Enhanced PIV with proprietary velocity, acceleration and jerk estimators, Inertia Matching Technology (IMT), Regressive AutoSpline (RAS) and Anti-Hunt. Provides velocity, acceleration, jerk, and friction feed-forward gains
	Torque control:	Synchronous vector with DQ decoupling, SmartSaturation, and auto calibration
PRIMARY ENCODER	Interface:	Single-ended or differential, user selectable
	Max count rate:	24 MHz, quadrature, count rate
	Features:	Bad sequence detection, digital filtering adjustable from 100kHz to 40MHz
MOTOR COMPATIBILITY	Requirements:	Rotary brush or 3-phase brushless rotary/linear motor
LIMIT INPUTS	Interface:	TTL with 2kΩ pull-up; digitally filtered
HALL SENSOR INPUTS	Specifications:	5kΩ pull-up to +5V
	Features:	Digitally filtered; used for setting torque vector upon initialization only; drive can also operate in Hall-less mode
DEDICATED INTERFACE INPUTS/OUTPUTS	Outputs:	Drive ready; move done, in-range, all-systems-go; encoder and limit pass-through, +5V OUT @ 300mA max *Note: 300mA budget must include current draw from motor encoder/Hall sensors.*
	Inputs:	Enable motor; Mode (to engage/disengage drive features, such as torque foldback, HardStop homing, electronic gear shift etc.); Digital pulse and direction; encoder, limits, etc.
REAL-TIME MONITOR PORT	Features:	Configurable filtering, sync pulse at move start, wide scaling/high zoom, non-volatile
	Output Variables:	Position error, actual velocity, commanded velocity, velocity error, commanded torque, actual torque, SGN velocity, SGN position, measured position, jerk commanded, acceleration commanded, max phase voltage
PROTECTION & SAFETY FUNCTIONS	Drive protection:	Short circuit (phase-to-phase, phase-to-ground), over temp, over voltage, over current, protected for open windings, fused.
	Motor protection:	True RMS torque limiting, automatic speed limit, motor jam detection, over temp
	Mechanical safeguards:	Hardstop detection, limit switch servoing, adjustable tracking error limits and shutdown thresholds, adjustable torque and speed limits
	Electrical Isolation:	1.0mm (0.0394")
STEP AND DIRECTION MODE	Maximum Step Rate:	24MHz@50% duty cycle
	Features:	Digitally filtered, adjustable from 100kHz to 24MHz
INPUT SUPPLY	Input voltage:	20-90 VDC
	Input current:	Up to 6.75A RMS, 15A peak (application dependant)
COUNTRY OF ORIGIN	Manufactured in:	USA

SSt-E490 Specifications		
GENERAL	Dimensions, in (mm):	7.31 (185) x 4.876 (124) x 1.156 (29)
	Weight, oz (g):	17 (494)
ENVIRONMENTAL	Temperature:	0-40°C
	Humidity:	0-90%, non-condensing
COMPLIANCE	Electrical safety:	EN 61010, UL508C
	EMI:	EN 61326
	Machine safety:	EN 954-1, with proper power control
	RoHS	RoHS Compliant
OUTPUT POWER	Peak Current:	23A
	Continuous Current:	7A
	PWM ripple frequency:	28kHz, center balance vector type
	Conversion Efficiency:	>99%
COMPENSATOR	TSPD:	35 µS
	Position/Velocity control:	Enhanced PIV with proprietary velocity, acceleration and jerk estimators, Inertia Matching Technology (IMT), Regressive AutoSpline (RAS) and Anti-Hunt. Provides velocity, acceleration, jerk, and friction feed-forward gains
	Torque control:	Synchronous vector with DQ decoupling, SmartSaturation, and auto calibration
PRIMARY ENCODER	Interface:	Single-ended or differential, user selectable
	Max count rate:	24 MHz, quadrature, count rate
	Features:	Bad sequence detection, digital filtering adjustable from 100kHz to 40MHz
MOTOR COMPATIBILITY	Requirements:	Rotary brush or 3-phase brushless rotary/linear motor
LIMIT INPUTS	Interface:	TTL with 2kΩ pull-up; digitally filtered
HALL SENSOR INPUTS	Specifications:	5kΩ pull-up to +5V
	Features:	Digitally filtered; used for setting torque vector upon initialization only; drive can also operate in Hall-less mode
DEDICATED INTERFACE INPUTS/OUTPUTS	Outputs:	Drive ready; move done, in-range, all-systems-go; encoder and limit pass-through, +5V OUT @ 300mA max *Note: 300mA budget must include current draw from motor encoder/Hall sensors.*
	Inputs:	Enable motor; Mode (to engage/disengage drive features, such as torque foldback, HardStop homing, electronic gear shift etc.); Digital pulse and direction; encoder, limits, etc.
REAL-TIME MONITOR PORT	Features:	Configurable filtering, sync pulse at move start, wide scaling/high zoom, non-volatile
	Output Variables:	Position error, actual velocity, commanded velocity, velocity error, commanded torque, actual torque, SGN velocity, SGN position, measured position, jerk commanded, acceleration commanded, max phase voltage
PROTECTION & SAFETY FUNCTIONS	Drive protection:	Short circuit (phase-to-phase, phase-to-ground), over temp, over voltage, over current, protected for open windings, fused.
	Motor protection:	True RMS torque limiting, automatic speed limit, motor jam detection, over temp
	Mechanical safeguards:	Hardstop detection, limit switch servoing, adjustable tracking error limits and shutdown thresholds, adjustable torque and speed limits
	Electrical Isolation:	1.0mm (0.0394”)
STEP AND DIRECTION MODE	Maximum Step Rate:	24MHz@50% duty cycle
	Features:	Digitally filtered, adjustable from 100kHz to 24MHz
INPUT SUPPLY	Input voltage:	20-90 VDC
	Input current:	Up to 6.75A RMS, 15A peak (application dependant)
COUNTRY OF ORIGIN	Manufactured in:	USA

SSt-E520 Specifications

GENERAL	Dimensions, in (mm):	7.31 (185) x 4.876 (124) x 1.156 (29)
	Weight, oz (g):	17 (494)
ENVIRONMENTAL	Temperature:	0-40°C
	Humidity:	0-90%, non-condensing
COMPLIANCE	Electrical safety:	EN 61010, UL508C
	EMI:	EN 61326
	Machine safety:	EN 954-1, with proper power control
	RoHS	RoHS Compliant
OUTPUT POWER	Peak Current:	28A
	Continuous Current:	8A
	PWM ripple frequency:	28kHz, center balance vector type
	Conversion Efficiency:	>99%
COMPENSATOR	TSPD:	35 µS
	Position/Velocity control:	Enhanced PIV with proprietary velocity, acceleration and jerk estimators, Inertia Matching Technology (IMT), Regressive AutoSpline (RAS) and Anti-Hunt. Provides velocity, acceleration, jerk, and friction feed-forward gains
	Torque control:	Synchronous vector with DQ decoupling, SmartSaturation, and auto calibration
PRIMARY AND SECONDARY ENCODER	Interface:	Single-ended or differential, user selectable
	Max count rate:	24 MHz, quadrature, count rate
	Features:	Bad sequence detection, digital filtering adjustable from 100kHz to 40MHz
MOTOR COMPATIBILITY	Requirements:	Rotary brush or 3-phase brushless rotary/linear motor, galvo, voice coil
LIMIT INPUTS	Interface:	TTL with 2kΩ pull-up; digitally filtered
HALL SENSOR INPUTS	Specifications:	5kΩ pull-up to +5V
	Features:	Digitally filtered; used for setting torque vector upon initialization only; drive can also operate in Hall-less mode
DEDICATED INTERFACE INPUTS/OUTPUTS	Outputs:	Drive ready; move done, in-range, all-systems-go; encoder and limit pass-through, +5V OUT @ 300mA max *Note: 300mA budget must include current draw from motor encoder/Hall sensors.*
	Inputs:	Enable motor; Mode (to engage/disengage drive features, such as torque foldback, hardstop homing, electronic gear shift etc.); Digital pulse and direction; ±10V torque, ±10V velocity, encoder, limits, etc.
REAL-TIME MONITOR PORT	Features:	Configurable filtering, sync pulse at move start, wide scaling/high zoom, non-volatile
	Output variables:	Position error, actual velocity, commanded velocity, velocity error, commanded torque, actual torque, SGN velocity, SGN position, measured position, jerk commanded, acceleration commanded, max phase voltage
PROTECTION & SAFETY FUNCTIONS	Drive protection:	Short circuit (phase-to-phase, phase-to-ground), over temp, over voltage, over current, protected for open windings, fused.
	Motor protection:	True RMS torque limiting, automatic speed limit, motor jam detection, over temp
	Mechanical safeguards:	Hardstop detection, limit switch servoing, adjustable tracking error limits and shutdown thresholds, adjustable torque and speed limits
	Electrical Isolation:	1.0mm (0.0394")
STEP AND DIRECTION MODE	Maximum Step Rate:	24MHz@50% duty cycle
	Features:	Digitally filtered, adjustable from 100kHz to 24MHz
± 10V ANALOG MODE	Format:	Differential input, ±10V range, >10kΩ impedance, 10% of peak per volt scale
INPUT SUPPLY	Input voltage:	20-90 VDC
	Input current:	Up to 6.75A RMS, 15A peak (application dependant)
COUNTRY OF ORIGIN	Manufactured in:	USA

SSt-E545 Specifications

GENERAL	Dimensions, in (mm):	7.31 (185) x 4.876 (124) x 1.156 (29)
	Weight, oz (g):	17 (494)
ENVIRONMENTAL	Temperature:	0-40°C
	Humidity:	0-90%, non-condensing
COMPLIANCE	Electrical safety:	EN 61010, UL508C
	EMI:	EN 61326
	Machine safety:	EN 954-1, with proper power control
	RoHS	RoHS Compliant
OUTPUT POWER	Peak Current:	33A
	Continuous Current:	12A
	PWM ripple frequency:	28kHz, center balance vector type
	Conversion Efficiency:	>99%
COMPENSATOR	TSPD:	35 µS
	Position/Velocity control:	Enhanced PIV with proprietary velocity, acceleration and jerk estimators, Inertia Matching Technology (IMT), Regressive AutoSpline (RAS) and Anti-Hunt. Provides velocity, acceleration, jerk, and friction feed-forward gains
	Torque control:	Synchronous vector with DQ decoupling, SmartSaturation, and auto calibration
PRIMARY AND SECONDARY ENCODER	Interface:	Single-ended or differential, user selectable
	Max count rate:	24 MHz, quadrature, count rate
	Features:	Bad sequence detection, digital filtering adjustable from 100kHz to 40MHz
MOTOR COMPATIBILITY	Requirements:	Rotary brush or 3-phase brushless rotary/linear motor, galvo, voice coil
LIMIT INPUTS	Interface:	TTL with 2kΩ pull-up; digitally filtered
HALL SENSOR INPUTS	Specifications:	5kΩ pull-up to +5V
	Features:	Digitally filtered; used for setting torque vector upon initialization only; drive can also operate in Hall-less mode
DEDICATED INTERFACE INPUTS/OUTPUTS	Outputs:	Drive ready; move done, in-range, all-systems-go; encoder and limit pass-through, +5V OUT @ 300mA max *Note: 300mA budget must include current draw from motor encoder/Hall sensors.*
	Inputs:	Enable motor; Mode (to engage/disengage drive features, such as torque foldback, hardstop homing, electronic gear shift etc.); Digital pulse and direction; ±10V torque, ±10V velocity, encoder, limits, etc.
REAL-TIME MONITOR PORT	Features:	Configurable filtering, sync pulse at move start, wide scaling/high zoom, non-volatile
	Output variables:	Position error, actual velocity, commanded velocity, velocity error, commanded torque, actual torque, SGN velocity, SGN position, measured position, jerk commanded, acceleration commanded, max phase voltage
PROTECTION & SAFETY FUNCTIONS	Drive protection:	Short circuit (phase-to-phase, phase-to-ground), over temp, over voltage, over current, protected for open windings, fused.
	Motor protection:	True RMS torque limiting, automatic speed limit, motor jam detection, over temp
	Mechanical safeguards:	Hardstop detection, limit switch servoing, adjustable tracking error limits and shutdown thresholds, adjustable torque and speed limits
	Electrical Isolation:	1.0mm (0.0394”)
STEP AND DIRECTION MODE	Maximum Step Rate:	24MHz@50% duty cycle
	Features:	Digitally filtered, adjustable from 100kHz to 24MHz
± 10V ANALOG MODE	Format:	Differential input, ±10V range, >10kΩ impedance, 10% of peak per volt scale
INPUT SUPPLY	Input voltage:	20-90 VDC
	Input current:	Up to 6.75A RMS, 15A peak (application dependant)
COUNTRY OF ORIGIN	Manufactured in:	USA

SSt-E600 Specifications		
GENERAL	Dimensions, in (mm):	8.95 (227) x 6.40 (163) x 2.32 (59)
	Weight, oz (g):	53.5 (1515)
ENVIRONMENTAL	Temperature:	0-40°C
	Humidity:	10-90%, non-condensing
COMPLIANCE	Electrical safety:	UL508C , EN 61010 (pending)
	EMI:	EN 61326
	Machine safety:	EN 954-1, with proper power control
	RoHS	RoHS Compliant
OUTPUT POWER	Peak Current:	11A
	Continuous Current:	4A
	PWM ripple frequency:	28kHz, center balance vector type
	Conversion Efficiency:	>99%
COMPENSATOR	TSPD:	35 µS
	Position/Velocity control:	Enhanced PIV with proprietary velocity, acceleration and jerk estimators, Inertia Matching Technology (IMT), Regressive AutoSpline (RAS) and Anti-Hunt. Provides velocity, acceleration, jerk, and friction feed-forward gains
	Torque control:	Synchronous vector with DQ decoupling, SmartSaturation, and auto calibration
PRIMARY ENCODER	Interface:	Single-ended or differential, user selectable
	Max count rate:	24 MHz, quadrature, count rate
	Features:	Bad sequence detection, digital filtering adjustable from 100kHz to 40MHz
MOTOR COMPATIBILITY	Requirements:	Rotary brush or 3-phase brushless rotary/linear motor. Requires quadrature encoder feedback.
LIMIT INPUTS	Interface:	TTL with 2kΩ pull-up; digitally filtered
HALL SENSOR INPUTS	Specifications:	5kΩ pull-up to +5V
	Features:	Digitally filtered; used for setting torque vector upon initialization only; drive can also operate in Hall-less mode
DEDICATED INTERFACE INPUTS/OUTPUTS	Outputs:	Drive ready; move done, in-range, all-systems-go; encoder and limit pass-through, +5V out @ 300mA max *Note: 300mA budget must include current draw from motor encoder/Hall sensors.*
	Inputs:	Enable motor; Mode (to engage/disengage drive features, such as torque foldback, hardstop homing, electronic gear shift etc.); Digital pulse and direction; encoder, limits, etc.
REAL-TIME MONITOR PORT	Features:	Configurable filtering, sync pulse at move start, wide scaling/high zoom, non-volatile
	Output Variables:	Position error, actual velocity, commanded velocity, velocity error, commanded torque, actual torque, SGN velocity, SGN position, measured position, jerk commanded, acceleration commanded, max phase voltage
PROTECTION & SAFETY FUNCTIONS	Drive protection:	Short circuit (phase-to-phase, phase-to-ground), over temp, over voltage, over current, protected for open windings, fused.
	Motor protection:	True RMS torque limiting, automatic speed limit, motor jam detection, over temp
	Mechanical safeguards:	Hardstop detection, limit switch servoing, adjustable tracking error limits and shutdown thresholds, adjustable torque and speed limits
	Electrical Isolation:	6.0mm (0.236”)
STEP AND DIRECTION MODE	Maximum Step Rate:	24MHz@50% duty cycle
	Features:	Digitally filtered, adjustable from 100kHz to 24MHz
INPUT SUPPLY	Input voltage:	130-360VDC (derived from IPC @ 90-250VAC, single or 3-phase
	Input current: (max.) Input current (typical)	15A RMS 5A RMS, application dependant
COUNTRY OF ORIGIN	Manufactured in:	USA

SSt-E610 Specifications		
GENERAL	Dimensions, in (mm):	8.95 (227) x 6.40 (163) x 2.32 (59)
	Weight, oz (g):	53.5 (1515)
ENVIRONMENTAL	Temperature:	0-40°C
	Humidity:	10-90%, non-condensing
COMPLIANCE	Electrical safety:	UL508C , EN 61010 (pending)
	EMI:	EN 61326
	Machine safety:	EN 954-1, with proper power control
	RoHS	RoHS Compliant
OUTPUT POWER	Peak Current:	13A
	Continuous Current:	5A
	PWM ripple frequency:	28kHz, center balance vector type
	Conversion Efficiency:	>99%
COMPENSATOR	TSPD:	35 µS
	Position/Velocity control:	Enhanced PIV with proprietary velocity, acceleration and jerk estimators, Inertia Matching Technology (IMT), Regressive AutoSpline (RAS) and Anti-Hunt. Provides velocity, acceleration, jerk, and friction feed-forward gains
	Torque control:	Synchronous vector with DQ decoupling, SmartSaturation, and auto calibration
PRIMARY ENCODER	Interface:	Single-ended or differential, user selectable
	Max count rate:	24 MHz, quadrature, count rate
	Features:	Bad sequence detection, digital filtering adjustable from 100kHz to 40MHz
MOTOR COMPATIBILITY	Requirements:	Rotary brush or 3-phase brushless rotary/linear motor. Requires quadrature encoder feedback.
LIMIT INPUTS	Interface:	TTL with 2kΩ pull-up; digitally filtered
HALL SENSOR INPUTS	Specifications:	5kΩ pull-up to +5V
	Features:	Digitally filtered; used for setting torque vector upon initialization only; drive can also operate in Hall-less mode
DEDICATED INTERFACE INPUTS/OUTPUTS	Outputs:	Drive ready; move done, in-range, all-systems-go; encoder and limit pass-through, +5V OUT @ 300mA max *Note: 300mA budget must include current draw from motor encoder/Hall sensors.*
	Inputs:	Enable motor; Mode (to engage/disengage drive features, such as torque foldback, hardstop homing, electronic gear shift etc.); Digital pulse and direction; encoder, limits, etc.
REAL-TIME MONITOR PORT	Features:	Configurable filtering, sync pulse at move start, wide scaling/high zoom, non-volatile
	Output Variables:	Position error, actual velocity, commanded velocity, velocity error, commanded torque, actual torque, SGN velocity, SGN position, measured position, jerk commanded, acceleration commanded, max phase voltage
PROTECTION & SAFETY FUNCTIONS	Drive protection:	Short circuit (phase-to-phase, phase-to-ground), over temp, over voltage, over current, protected for open windings, fused.
	Motor protection:	True RMS torque limiting, automatic speed limit, motor jam detection, over temp
	Mechanical safeguards:	Hardstop detection, limit switch servoing, adjustable tracking error limits and shutdown thresholds, adjustable torque and speed limits
	Electrical Isolation:	6.0mm (0.236")
STEP AND DIRECTION MODE	Maximum Step Rate:	24MHz@50% duty cycle
	Features:	Digitally filtered, adjustable from 100kHz to 24MHz
INPUT SUPPLY	Input voltage:	130-360VDC (derived from IPC @ 90-250VAC, single or 3-phase
	Input current: (max.) Input current (typical)	15A RMS 5A RMS, application dependant
COUNTRY OF ORIGIN	Manufactured in:	USA

SSt-E720 Specifications

GENERAL	Dimensions, in (mm):	8.95 (227) x 6.40 (163) x 2.32 (59)
	Weight, oz (g):	53.5 (1515)
ENVIRONMENTAL	Temperature:	0-40°C
	Humidity:	10-90%, non-condensing
COMPLIANCE	Electrical safety:	UL508C , EN 61010 (pending)
	EMI:	EN 61326
	Machine safety:	EN 954-1, with proper power control
	RoHS	RoHS Compliant
OUTPUT POWER	Peak Current:	16A
	Continuous Current:	7A
	PWM ripple frequency:	28kHz, center balance vector type
	Conversion Efficiency:	>99%
COMPENSATOR	TSPD:	35 µS
	Position/Velocity control:	Enhanced PIV with proprietary velocity, acceleration and jerk estimators, Inertia Matching Technology (IMT), Regressive AutoSpline (RAS) and Anti-Hunt. Provides velocity, acceleration, jerk, and friction feed-forward gains
	Torque control:	Synchronous vector with DQ decoupling, SmartSaturation, and auto calibration
PRIMARY AND SECONDARY ENCODER	Interface:	Single-ended or differential, user selectable
	Max count rate:	24 MHz, quadrature, count rate
	Features:	Bad sequence detection, digital filtering adjustable from 100kHz to 40MHz
MOTOR COMPATIBILITY	Requirements:	Rotary brush or 3-phase brushless rotary/linear motor, galvos, voice coil. Requires quadrature encoder feedback.
LIMIT INPUTS	Interface:	TTL with 2kΩ pull-up; digitally filtered
HALL SENSOR INPUTS	Specifications:	5kΩ pull-up to +5V
	Features:	Digitally filtered; used for setting torque vector upon initialization only; drive can also operate in Hall-less mode
DEDICATED INTERFACE INPUTS/OUTPUTS	Outputs:	Drive ready; move done, in-range, all-systems-go; encoder and limit pass-through, +5V OUT @ 300mA max *Note: 300mA budget must include current draw from motor encoder/Hall sensors.*
	Inputs:	Enable motor; Mode (to engage/disengage drive features, such as torque foldback, hardstop homing, electronic gear shift etc.); Digital pulse and direction; encoder, limits, etc.
REAL-TIME MONITOR PORT	Features:	Configurable filtering, sync pulse at move start, wide scaling/high zoom, non-volatile
	Output Variables:	Position error, actual velocity, commanded velocity, velocity error, commanded torque, actual torque, SGN velocity, SGN position, measured position, jerk commanded, acceleration commanded, max phase voltage
PROTECTION & SAFETY FUNCTIONS	Drive protection:	Short circuit (phase-to-phase, phase-to-ground), over temp, over voltage, over current, protected for open windings, fused.
	Motor protection:	True RMS torque limiting, automatic speed limit, motor jam detection, over temp
	Mechanical safeguards:	Hardstop detection, limit switch servoing, adjustable tracking error limits and shutdown thresholds, adjustable torque and speed limits
	Electrical Isolation:	6.0mm (0.236”)
STEP AND DIRECTION MODE	Maximum Step Rate:	24MHz@50% duty cycle
	Features:	Digitally filtered, adjustable from 100kHz to 24MHz
INPUT SUPPLY	Input voltage:	130-360VDC (derived from IPC @ 90-250VAC, single or 3-phase
	Input current: (max.) Input current (typical)	15A RMS 5A RMS, application dependant
COUNTRY OF ORIGIN	Manufactured in:	USA

SSt-E730 Specifications		
GENERAL	Dimensions, in (mm):	8.95 (227) x 6.40 (163) x 2.32 (59)
	Weight, oz (g):	53.5 (1515)
ENVIRONMENTAL	Temperature:	0-40°C
	Humidity:	10-90%, non-condensing
COMPLIANCE	Electrical safety:	UL508C , EN 61010 (pending)
	EMI:	EN 61326
	Machine safety:	EN 954-1, with proper power control
	RoHS	RoHS Compliant
OUTPUT POWER	Peak Current:	23A
	Continuous Current:	12A
	PWM ripple frequency:	28kHz, center balance vector type
	Conversion Efficiency:	>99%
COMPENSATOR	TSPD:	35 µS
	Position/Velocity control:	Enhanced PIV with proprietary velocity, acceleration and jerk estimators, Inertia Matching Technology (IMT), Regressive AutoSpline (RAS) and Anti-Hunt. Provides velocity, acceleration, jerk, and friction feed-forward gains
	Torque control:	Synchronous vector with DQ decoupling, SmartSaturation, and auto calibration
PRIMARY AND SECONDARY ENCODER	Interface:	Single-ended or differential, user selectable
	Max count rate:	24 MHz, quadrature, count rate
	Features:	Bad sequence detection, digital filtering adjustable from 100kHz to 40MHz
MOTOR COMPATIBILITY	Requirements:	Rotary brush or 3-phase brushless rotary/linear motor, galvos, voice coil. Requires quadrature encoder feedback.
LIMIT INPUTS	Interface:	TTL with 2kΩ pull-up; digitally filtered
HALL SENSOR INPUTS	Specifications:	5kΩ pull-up to +5V
	Features:	Digitally filtered; used for setting torque vector upon initialization only; drive can also operate in Hall-less mode
DEDICATED INTERFACE INPUTS/OUTPUTS	Outputs:	Drive ready; move done, in-range, all-systems-go; encoder and limit pass-through, +5V OUT @ 300mA max *Note: 300mA budget must include current draw from motor encoder/Hall sensors.*
	Inputs:	Enable motor; Mode (to engage/disengage drive features, such as torque foldback, hardstop homing, electronic gear shift etc.); Digital pulse and direction; encoder, limits, etc.
REAL-TIME MONITOR PORT	Features:	Configurable filtering, sync pulse at move start, wide scaling/high zoom, non-volatile
	Output Variables:	Position error, actual velocity, commanded velocity, velocity error, commanded torque, actual torque, SGN velocity, SGN position, measured position, jerk commanded, acceleration commanded, max phase voltage
PROTECTION & SAFETY FUNCTIONS	Drive protection:	Short circuit (phase-to-phase, phase-to-ground), over temp, over voltage, over current, protected for open windings, fused.
	Motor protection:	True RMS torque limiting, automatic speed limit, motor jam detection, over temp
	Mechanical safeguards:	Hardstop detection, limit switch servoing, adjustable tracking error limits and shutdown thresholds, adjustable torque and speed limits
	Electrical Isolation:	6.0mm (0.236")
STEP AND DIRECTION MODE	Maximum Step Rate:	24MHz@50% duty cycle
	Features:	Digitally filtered, adjustable from 100kHz to 24MHz
INPUT SUPPLY	Input voltage:	130-360VDC (derived from IPC @ 90-250VAC, single or 3-phase
	Input current: (max.) Input current (typical)	15A RMS 5A RMS, application dependant
COUNTRY OF ORIGIN	Manufactured in:	USA

SSt-E750 Specifications		
GENERAL	Dimensions, in (mm):	8.95 (227) x 6.40 (163) x 2.32 (59)
	Weight, oz (g):	53.5 (1515)
ENVIRONMENTAL	Temperature:	0-40°C
	Humidity:	10-90%, non-condensing
COMPLIANCE	Electrical safety:	UL508C , EN 61010 (pending)
	EMI:	EN 61326
	Machine safety:	EN 954-1, with proper power control
	RoHS	RoHS Compliant
OUTPUT POWER	Peak Current:	30A
	Continuous Current:	15A
	PWM ripple frequency:	28kHz, center balance vector type
	Conversion Efficiency:	>99%
COMPENSATOR	TSPD:	35 µS
	Position/Velocity control:	Enhanced PIV with proprietary velocity, acceleration and jerk estimators, Inertia Matching Technology (IMT), Regressive AutoSpline (RAS) and Anti-Hunt. Provides velocity, acceleration, jerk, and friction feed-forward gains
	Torque control:	Synchronous vector with DQ decoupling, SmartSaturation, and auto calibration
PRIMARY AND SECONDARY ENCODER	Interface:	Single-ended or differential, user selectable
	Max count rate:	24 MHz, quadrature, count rate
	Features:	Bad sequence detection, digital filtering adjustable from 100kHz to 40MHz
MOTOR COMPATIBILITY	Requirements:	Rotary brush or 3-phase brushless rotary/linear motor, galvos, voice coil. Requires quadrature encoder feedback.
LIMIT INPUTS	Interface:	TTL with 2kΩ pull-up; digitally filtered
HALL SENSOR INPUTS	Specifications:	5kΩ pull-up to +5V
	Features:	Digitally filtered; used for setting torque vector upon initialization only; drive can also operate in Hall-less mode
DEDICATED INTERFACE INPUTS/OUTPUTS	Outputs:	Drive ready; move done, in-range, all-systems-go; encoder and limit pass-through, +5V @ 300mA max *Note: 300mA budget must include current draw from motor encoder/Hall sensors.*
	Inputs:	Enable motor; Mode (to engage/disengage drive features, such as torque foldback, hardstop homing, electronic gear shift etc.); Digital pulse and direction; encoder, limits, etc.
REAL-TIME MONITOR PORT	Features:	Configurable filtering, sync pulse at move start, wide scaling/high zoom, non-volatile
	Output Variables:	Position error, actual velocity, commanded velocity, velocity error, commanded torque, actual torque, SGN velocity, SGN position, measured position, jerk commanded, acceleration commanded, max phase voltage
PROTECTION & SAFETY FUNCTIONS	Drive protection:	Short circuit (phase-to-phase, phase-to-ground), over temp, over voltage, over current, protected for open windings, fused.
	Motor protection:	True RMS torque limiting, automatic speed limit, motor jam detection, over temp
	Mechanical safeguards:	Hardstop detection, limit switch servoing, adjustable tracking error limits and shutdown thresholds, adjustable torque and speed limits
	Electrical Isolation:	6.0mm (0.236”)
STEP AND DIRECTION MODE	Maximum Step Rate:	24MHz@50% duty cycle
	Features:	Digitally filtered, adjustable from 100kHz to 24MHz
INPUT SUPPLY	Input voltage:	130-360VDC (derived from IPC @ 90-250VAC, single or 3-phase
	Input current: (max.) Input current (typical)	15A RMS 5A RMS, application dependant
COUNTRY OF ORIGIN	Manufactured in:	USA

SSt-E760 Specifications

GENERAL	Dimensions, in (mm):	8.95 (227) x 6.40 (163) x 2.32 (59)
	Weight, oz (g):	53.5 (1515)
ENVIRONMENTAL	Temperature:	0-40°C
	Humidity:	10-90%, non-condensing
COMPLIANCE	Electrical safety:	UL508C , EN 61010 (pending)
	EMI:	EN 61326
	Machine safety:	EN 954-1, with proper power control
	RoHS	RoHS Compliant
OUTPUT POWER	Peak Current:	50A
	Continuous Current:	20A
	PWM ripple frequency:	28kHz, center balance vector type
	Conversion Efficiency:	>99%
COMPENSATOR	TSPD:	35 µS
	Position/Velocity control:	Enhanced PIV with proprietary velocity, acceleration and jerk estimators, Inertia Matching Technology (IMT), Regressive AutoSpline (RAS) and Anti-Hunt. Provides velocity, acceleration, jerk, and friction feed-forward gains
	Torque control:	Synchronous vector with DQ decoupling, SmartSaturation, and auto calibration
PRIMARY AND SECONDARY ENCODER	Interface:	Single-ended or differential, user selectable
	Max count rate:	24 MHz, quadrature, count rate
	Features:	Bad sequence detection, digital filtering adjustable from 100kHz to 40MHz
MOTOR COMPATIBILITY	Requirements:	Rotary brush or 3-phase brushless rotary/linear motor, galvos, voice coil. Requires quadrature encoder feedback.
LIMIT INPUTS	Interface:	TTL with 2kΩ pull-up; digitally filtered
HALL SENSOR INPUTS	Specifications:	5kΩ pull-up to +5V
	Features:	Digitally filtered; used for setting torque vector upon initialization only; drive can also operate in Hall-less mode
DEDICATED INTERFACE INPUTS/OUTPUTS	Outputs:	Drive ready; move done, in-range, all-systems-go; encoder and limit pass-through, +5V OUT @ 300mA max *Note: 300mA budget must include current draw from motor encoder/Hall sensors.*
	Inputs:	Enable motor; Mode (to engage/disengage drive features, such as torque foldback, hardstop homing, electronic gear shift etc.); Digital pulse and direction; encoder, limits, etc.
REAL-TIME MONITOR PORT	Features:	Configurable filtering, sync pulse at move start, wide scaling/high zoom, non-volatile
	Output Variables:	Position error, actual velocity, commanded velocity, velocity error, commanded torque, actual torque, SGN velocity, SGN position, measured position, jerk commanded, acceleration commanded, max phase voltage
PROTECTION & SAFETY FUNCTIONS	Drive protection:	Short circuit (phase-to-phase, phase-to-ground), over temp, over voltage, over current, protected for open windings, fused.
	Motor protection:	True RMS torque limiting, automatic speed limit, motor jam detection, over temp
	Mechanical safeguards:	Hardstop detection, limit switch servoing, adjustable tracking error limits and shutdown thresholds, adjustable torque and speed limits
	Electrical Isolation:	6.0mm (0.236”)
STEP AND DIRECTION MODE	Maximum Step Rate:	24MHz@50% duty cycle
	Features:	Digitally filtered, adjustable from 100kHz to 24MHz
INPUT SUPPLY	Input voltage:	130-360VDC (derived from IPC @ 90-250VAC, single or 3-phase
	Input current: (max.) Input current (typical)	15A RMS 5A RMS
COUNTRY OF ORIGIN	Manufactured in:	USA

APPENDIX B: GOLDEN RULES OF INSTALLATION FOR SST-ECLIPSE SERVO DRIVES

Rules #1, 7, 10, & 12 are particularly important for proper machine operation and have been highlighted in grey.

POWER

1. Ground all SSt-Eclipse drives to the machine chassis or frame. Use unplated 8-32 (10-32 for E6xx/E7xx models) screws to secure the SSt-Eclipse case extrusion to the machine. Verify that the frame is connected to the machine's Protective Earth Terminal (safety ground).

2. Don't run the drive power return through the machine's frame or chassis. **E4xx/E5xx only:** Connect the drive power return (negative lead) to the machine frame or chassis only at the power supply.

Note: The DC bus power to the **E6xx/E7xx drives**—provided by the Amazon IPC power supply—is *not* referenced to ground. Both the positive and negative leads of the IPC carry hazardous voltages.

3. Daisy chaining power through the SSt-Eclipse power connectors is perfectly acceptable. Because of the full electrical isolation between the Eclipse servo drive's power and control signals, "star" power distribution is not required.

4. Use heavy gauge wire for power cables as shown below:

E4xx/E5xx only

Number of units in power chain	Wire Gauge Required	Max. Recommended Fuse/Breaker
1-4	16 AWG	15A time delay (T)
5+	14 AWG	20A time delay (T)

5. **E4xx/E5xx only:** The quiescent output voltage of the supply (when all of the SSt-Eclipse E4xx/E5xx servo drive models are connected and disabled) should be no more than 85.0 VDC. If the output is higher than this, change the input (or output) taps on the power supply's transformer to lower the voltage. (The servo units will perform a safety I/V shutdown at 90.0 VDC.)

GROUNDING AND SHIELDING

6. Use shielded cable for all control signal connections: the motor's encoder & commutation signals, optional connections and the I/O and limit cables. The encoder and controller cables should have low capacitance insulation. Low capacitance cable conductors are typically made from polyethylene, foamed polyethylene, Teflon®, FEP, etc.

7. Connect the control signal cable's isolated control ground to the machine frame or chassis only at a single point at the controller. Do not hook isolated control ground to the machine frame or chassis at any other location.
8. ***Do not*** ground the limit switch circuit to the machine frame or chassis.

MOTOR CABLES

9. Use heavy gauge shielded cable for the motor phase wiring. Connect the shield to pin 1 on the SSt-Eclipse servo drive's motor connector (case ground).
10. Don't ground the encoder cable shield to the motor case or allow it to touch the motor phase shield at any point.
11. Don't run the motor's commutation (Hall) signals through the motor phase cable at any point.
12. Don't run motor thermostat signals (if any) through the motor phase cable at any point.

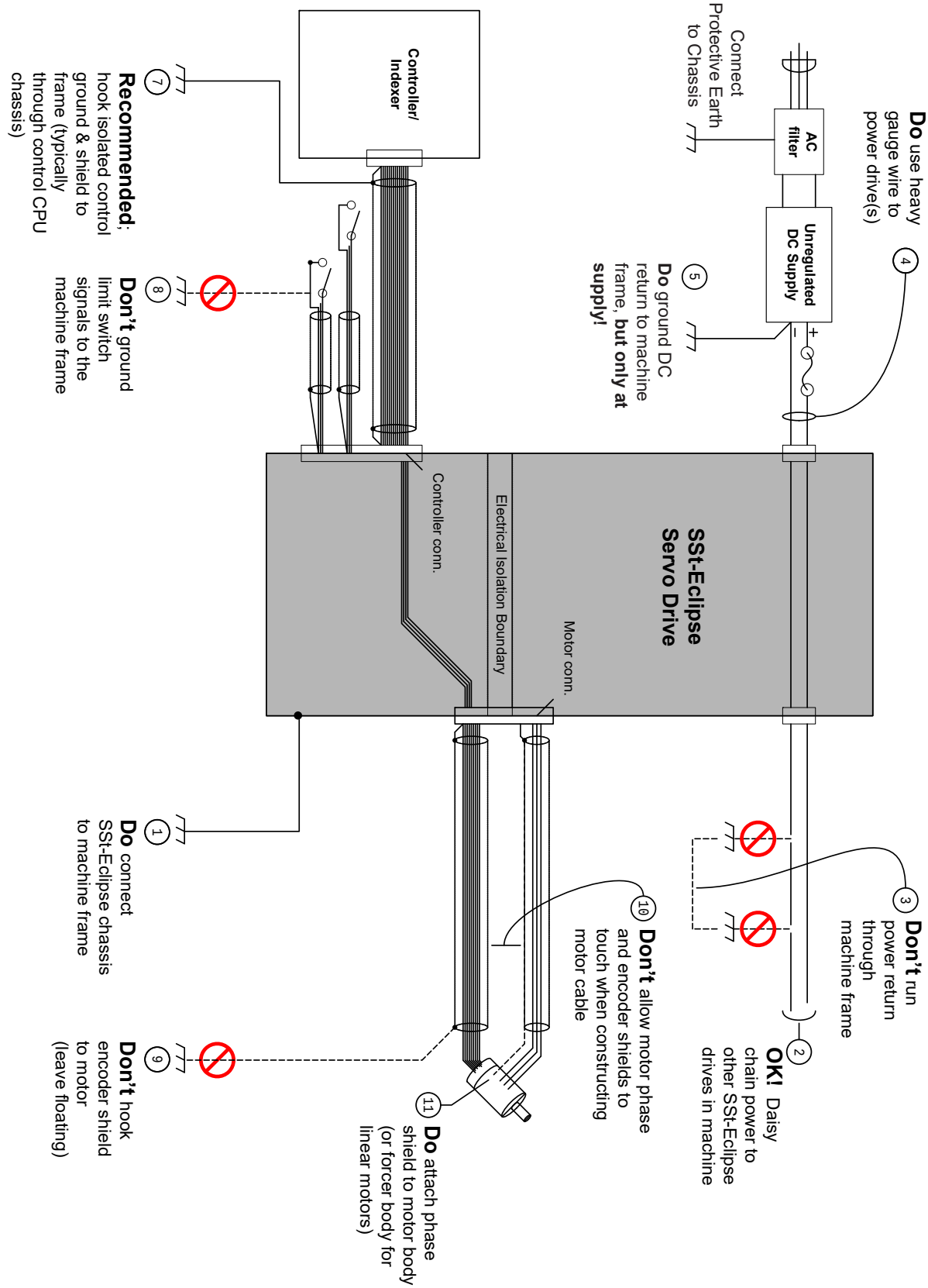

Golden Rules of Installation Illustration

CABLE MAKING TOOLS & TECHNIQUES

The following guidelines will help minimize cable design and fabrication problems.

GENERAL RECOMMENDATIONS

1. Avoid cables made with hand tools.

Hand crimping tools, when properly selected and used by a skilled operator, make good crimp connections. However, since these tools are expensive, typically $200 - $400 each, technicians rarely have the wide variety required to make proper crimps on all of the terminal types and wire sizes they encounter.

Unfortunately, it's easy to use the wrong tool and not realize it, or even more likely, to use the wrong tool and think it's "probably OK". These hand tools are awkward, cumbersome to use and often require the operator to master a certain "feel". In addition, these hand tools don't have any built-in quality assurance features.

In certain instances, you may be forced to make a hand crimped cable, for example, when you're in a hurry for a custom length. If you do, be sure that you have the *exact hand tool and die* that the terminal manufacturer recommends (see below), perform a visual inspection to ensure that the insulation is captured in the terminal's strain relief and do a pull test on each connection before inserting it into the connector.

Under no circumstances, should you ever hand-make a cable to save money. Machine-crimped cables will cost less than hand crimped versions and are likely to save thousands of dollars of debugging time.

2. Verify that your cable shop has all of the proper tools and equipment.

Use a cable shop that has automated presses for wire termination and make sure they have the proper applicator "heads" (dies) for the exact terminals used. (If they don't, consider buying applicator heads for them). It's strongly preferred that they have presses with automatic "crimp height" checking as this in-process check is the main measure of termination quality. Making this 100% check without requiring human intervention is a key advantage. If they don't have these automatic crimp-height-checking presses, make sure their general procedures include checking the crimp height on first articles and periodically during a run of cables. Under no circumstances should you accept a shop using hand tools.

3. Specify 100% electrical testing of all cables.

Specify that cables and harnesses be 100% electrically tested, preferably with resistance tests. The cable shop should have automated equipment by CableScan, DynaLab, CheckSum, or other vendors for this purpose. The fixture cost for 100% electrical testing is low, ranging from $0-$200 per cable assembly, and it's definitely worth it.

4. Be certain that all terminals are properly specified

Check all your terminal specifications carefully. Research all of your drawings and make certain that the terminals specified can accept the

necessary wire gauges. Also, look carefully at the insulation diameter range supported by each terminal. If the insulation diameter range on the terminal is incorrect for the wire used, the individual wire strain relief will be compromised and this can lead to premature failure. Make certain that the plating between mating terminals is the same. Using gold is great, but not if you are mating with tin. Use gold plated terminals with gold plated connectors and tin plated terminals with tin plated connectors to avoid galvanic corrosion.

5. Prepare complete, pictorial drawings.

Create drawings that are pictorial in nature (i.e. visually representative of the subject). Include fabrication details such as jacket strip lengths, shield termination details, cable tie locations, marking details, etc. The more call-outs, detail views, and exploded views, the better. Visual communication is critical here. Don't leave the details to the cable shop: "best practices" vary *widely* from shop to shop. Include the complete BOM right on the drawing. Finally, make the end-to-end cable length easy to modify. This may help reduce future drawing effort if you need similar cables of varying length at some point in the future.

A NOTE ON HAND CRIMP TOOLS

When necessary, quality cables can be made with hand tools, provided that the manufacturer's guidelines are faithfully followed. An excellent web-based resource on this subject is the Molex document "Good Crimps and How to Recognize Them", found in the Tech Library section of the Molex website. This collection of crimp-specific reference information includes how to identify good and bad crimps as well as best practices and specifications for crimp techniques and tooling.

Note: Though similar in appearance, each type of crimp terminal requires a specific handset and die. Failure to use the proper tool, die set, or terminal for the job will result in poor quality terminations and premature cable harness failures.

Note: Cable failures due to poor crimp quality are the most common mode of failure for OEM machine manufacturers and their customers.

APPENDIX C: CONNECTOR REFERENCE FOR MODELS E4XX/E5XX

J1 – Control Connector	Pin	Signal Name	Mates With
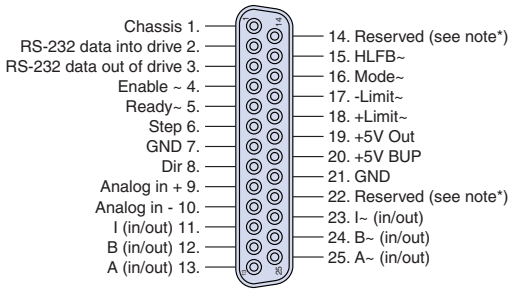 WIRE ENTRY VIEW	1	Chassis	**CONNECTOR** AMP/207464-7 **CONTACTS** AMP/745254-2 (22-26 AWG) **HOOD** AMP/206478-3 **CRIMP TOOL** AMP/58448-2 **PIN EXTRACTOR** AMP/91285-1
	2	RS-232 serial data into drive	
	3	RS-232 serial data out of drive	
	4	Enable~	
	5	Ready~	
	6	Step	
	7	GND	
	8	Dir	
	9	Analog in +	
	10	Analog in -	
	11	I (in/out)	
	12	B (in/out)	
	13	A (in/out)	
	14	N/C	
	15	HLFB~	
	16	Mode~	
	17	-Limit~	
	18	+Limit~	
	19	+5v Out	
	20	+5v BUP	
	21	GND	
	22	N/C	
	23	I~ (in/out)	
	24	B~ (in/out)	
	25	A~ (in/out)	

P3, P4 Power Connector	Pin	Signal Name	Mates With
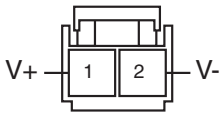 WIRE ENTRY VIEW	1	V+	**CONNECTOR** Molex/44441-2002 **CONTACTS** Molex/43375-1001 (14-18 AWG) **CRIMP TOOL** Molex/63811-7200 **PIN EXTRACTOR** Molex/63813-2700
	2	V-	

P5 Motor Connector	Pin	Signal Name	Mates With
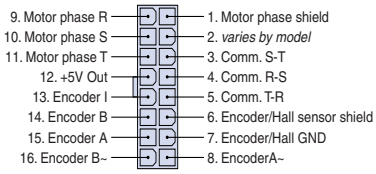 WIRE ENTRY VIEW	1	Motor Phase Shield	**CONNECTOR** Molex/39-01-2160 **CONTACTS** Molex/39-00-0047 (24 AWG) Molex/39-00-0077 (16 AWG) **CRIMP TOOL** Molex/638190900 (16-24 AWG) **PIN EXTRACTOR** Molex/11-03-0044
	2	Varies by model	
	3	Comm. S-T	
	4	Comm. R-S	
	5	Comm. T-R	
	6	Encoder/Hall Shields	
	7	Encoder/Hall GND	
	8	Encoder A~	
	9	Motor Phase R	
	10	Motor Phase S	
	11	Motor Phase T	
	12	+5V Out	
	13	Encoder I	
	14	Encoder B	
	15	Encoder A	
	16	Encoder B~	

APPENDIX D: CONNECTOR REFERENCE FOR MODELS E6XX/E7XX

J1 – Control Connector	Pin	Signal Name	Mates With
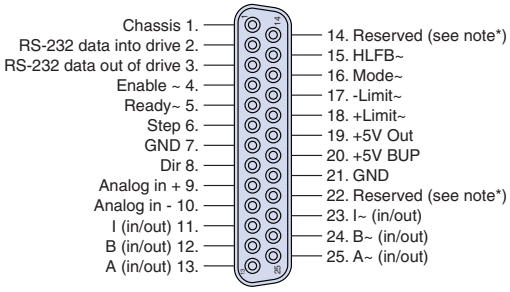 WIRE ENTRY VIEW ***Note:** Pins 14 and 22 are reserved for future use. Do not connect anything to these pins.	1	Chassis	**CONNECTOR** AMP/207464-7 **CONTACTS** AMP/745254-2 (22-26 AWG) **HOOD** AMP/206478-3 **CRIMP TOOL** AMP/58448-2 **PIN EXTRACTOR** AMP/91285-1
	2	RS-232 serial data into drive	
	3	RS-232 serial data out of drive	
	4	Enable~	
	5	Ready~	
	6	Step	
	7	GND	
	8	Dir	
	9	Analog in +	
	10	Analog in -	
	11	I (in/out)	
	12	B (in/out)	
	13	A (in/out)	
	14	Reserved (see note* at left)	
	15	HLFB~	
	16	Mode~	
	17	-Limit~	
	18	+Limit~	
	19	+5v Out	
	20	+5v BUP	
	21	GND	
	22	Reserved (see note* at left)	
	23	I~ (in/out)	
	24	B~ (in/out)	
	25	A~ (in/out)	

P3, P4 Power Connector	Pin	Signal Name	Mates With
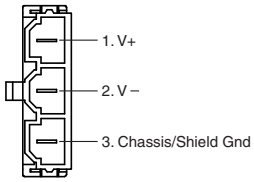 WIRE ENTRY VIEW	1	V+	**CONNECTOR** Molex/42816-0312 **CONTACTS** Molex/42815-0011-C (12 AWG) **CRIMP TOOL** Molex/63811-1600 **PIN EXTRACTOR** Molex/63813-0400
	2	V-	
	3	Chassis/Shield GND	

P5-A Motor Encoder	Pin	Signal Name	Mates With
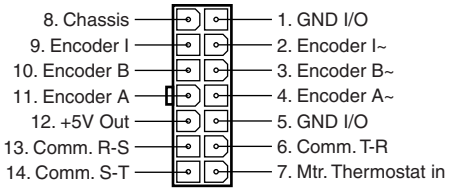 WIRE ENTRY VIEW	1	Gnd	**CONNECTOR** Molex/39-01-2140 **CONTACTS** Molex/39-00-0047 (24 AWG) **CRIMP TOOL** Molex/638190900 (16-24 AWG) **PIN EXTRACTOR** Molex/11-03-0044
	2	Encoder I~	
	3	Encoder B~	
	4	Encoder A~	
	5	Gnd	
	6	Comm. T-R	
	7	Mtr. Thermostat in	
	8	Chassis	
	9	Encoder I	
	10	Encoder B	
	11	Encoder A	
	12	+5V Out	
	13	Comm. R-S	
	14	Comm. S-T	

P5-B Motor Phases	Pin	Signal Name	Mates With
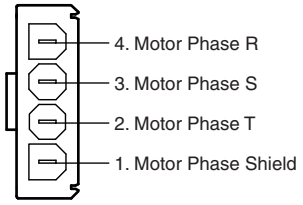 WIRE ENTRY VIEW	1	Motor Phase Shield	**CONNECTOR** Molex/44441-2004 **CONTACTS** Molex/43-375-0001 (14-18 AWG) **CRIMP TOOL** Molex/638117200 (14-18 AWG) **PIN EXTRACTOR** Molex/638132700
	2	Motor Phase T	
	3	Motor Phase S	
	4	Motor Phase R	

APPENDIX E: ECLIPSE LED BLINK CODES

Eclipse drives have two external status LEDs—one green, one red. If a drive shutdown occurs, the green status LED on the Eclipse drive will blink in one of two patterns to indicate the type of shutdown that has occurred. Shutdowns fall into two categories:

1) **Safety shutdown** (most common) - Green Status LED blinks out the error code with a 90% on, 10% off blink pattern. The drive is *reporting* a problem, but is not necessarily the *source* of the problem. Refer to blink code table below for detailed information and recommended actions.
2) **Drive failure shutdown** - Green Status LED blinks with a 10% on, 90% off blink pattern. The drive itself has failed and must be returned for repair or replacement. Contact Teknic for warranty information and return/repair instructions. Note: The blink codes listed below do not apply.

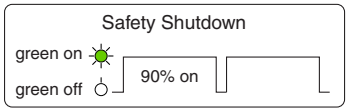

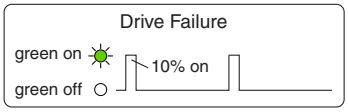

Note: Red Status LED

During normal operation, the Red Status LED will pulse briefly only during power up, reset, and power down. If the red LED is on or blinking at any other time, the Eclipse hardware is damaged and should be returned to Teknic for service.

Green LED	Status	Description	Troubleshooting Information
Rapid Blink	Servo drive power stage is enabled	The drive is actively servoing	No problem
Solid On	Servo drive is ready, but not enabled	The drive is not enabled and not shutdown	No problem. Enable drive to engage servo power stage.
1	Improper gear shift	Mode line state changed during motion	Check application software and wiring (signal ground or Mode line)
2	Illegal "000" commutation sensor state detected	Motor temperature sensor reporting over-temperature or commutation sensor problem	Verify external temperature of motor is below 85°C. Check for excessive friction or mechanical misalignment. Reduce duty cycle, velocity and/or acceleration. Verify motor is properly sized for application. Check commutation sensor wiring for shorts. Check commutation signaling.
4	Maximum drive (or motor) temperature exceeded	Servo drive internal thermal sensor registers high temperature or connected motor's thermostat has closed.	Verify ambient temperature is below specified value. Check motor thermostat wiring for short. Check for excessive friction, mechanical misalignment or excessive duty cycle. Verify motor is properly sized for application.
5	Tracking error limit exceeded	Servo drive, motor or mechanical system is unable to follow commanded motion profile to specified tolerance	Check mechanics for excessive friction or misalignment. Verify command parameters (vel/accel are not too high). Check that DC bus voltage is correct. Verify motor is properly sized for application. Check for loose/slipping coupling (when in dual-loop mode).

6	RMS torque limit exceeded	Servo has shut down to protect motor from high continuous torque demand	Check mechanics for excessive friction or misalignment. Verify command parameters (vel/accel are not too high). Check for excessive duty cycle. Verify that the motor is properly phased. Verify motor is properly sized for application.
7	Minimum motor encoder timing violated	An illegal transition was detected in the motor's encoder feedback	Check motor encoder cable for damage. Ensure high frequency return path exists between drive and motor so that electrical noise does not infiltrate signals. Check for loose pin/socket connections. Verify maximum allowable encoder speed has not been exceeded.
8	Both limit inputs asserted	The servo drive has engaged the soft E-stop function	Verify that the limit sensors are functioning properly if this behavior was not desired. Check for limit wiring problems. De-assert limit sensors or toggle the Enable signal to disengage E-stop condition.
9	Illegal commutation sensor state detected	An illegal state was detected on the motor's commutation sensors.	Verify proper operation and orientation of the commutation sensors. Check commutation sensors wiring for electrical noise, shorts, poor grounding, or loose connections.
10	ADC failure	The servo drive's ADC has failed.	Unit requires repair
11	Firmware checksum mismatch	The unit's firmware may be corrupted.	Reload firmware.
12	EE hardware failure	The servo drive's EEPROM has failed.	Unit requires repair
13	Vector data error	The unit's vector data has errors.	Check configuration file and reload.
14	Current sensor hardware fault	The unit's current sensor(s) have failed.	Unit requires repair
15	DC bus voltage powered off	Drive is in Logic Power Backup (LPB) mode	Not an error. Check DC bus voltage if condition is unexpected.
16	Power-up position recovery window exceeded	The unit's power-up position window was exceeded when coming up out of the LPB state.	The axis was moved too far while in logic power backup (LPB).
17	Coupling error limit exceeded	The difference between motor encoder position and load encoder position is beyond specified limit.	Check mechanical connection (coupling) from motor to mechanics.
18	Maximum bus current exceeded	Servo drive bus current exceeded acceptable levels	Check motor phase cable for short.
19	Maximum bus voltage exceeded	Servo drive bus voltage has exceeded acceptable levels	Check DC bus voltage. Check for regenerated voltage problem.
20	Step input noise problem	The servo drive's step input has detected errors in the incoming pulse stream.	Check step and direction inputs for electrical noise. Check controller output for problems such as "burst" pulsing. Verify step input filter setting is correct for commanded velocity. Check that Direction line has not transitioned multiple times in one sample time.
21	Minimum load encoder timing violated	An illegal transition was detected in the load encoder's feedback.	Check load encoder cable for damage. Ensure high frequency return path exists between drive and encoder so that electrical noise does not infiltrate signals. Check for loose connections. Verify maximum allowable encoder speed has not been exceeded.
24	Run-time error	Unit's processor has sustained a recoverable error.	Reset drive.

APPENDIX F: THE SST-ADT-E CARD

The SST-ADT-E accessory card attaches to the SSt-Eclipse servo drive at connector J1 and serves multiple purposes including communication between Eclipse drive and PC, scope probe access to drive and controller signals, and a manual/external enable switch. The diagram below calls out the various parts and functions of the ADT-E card.

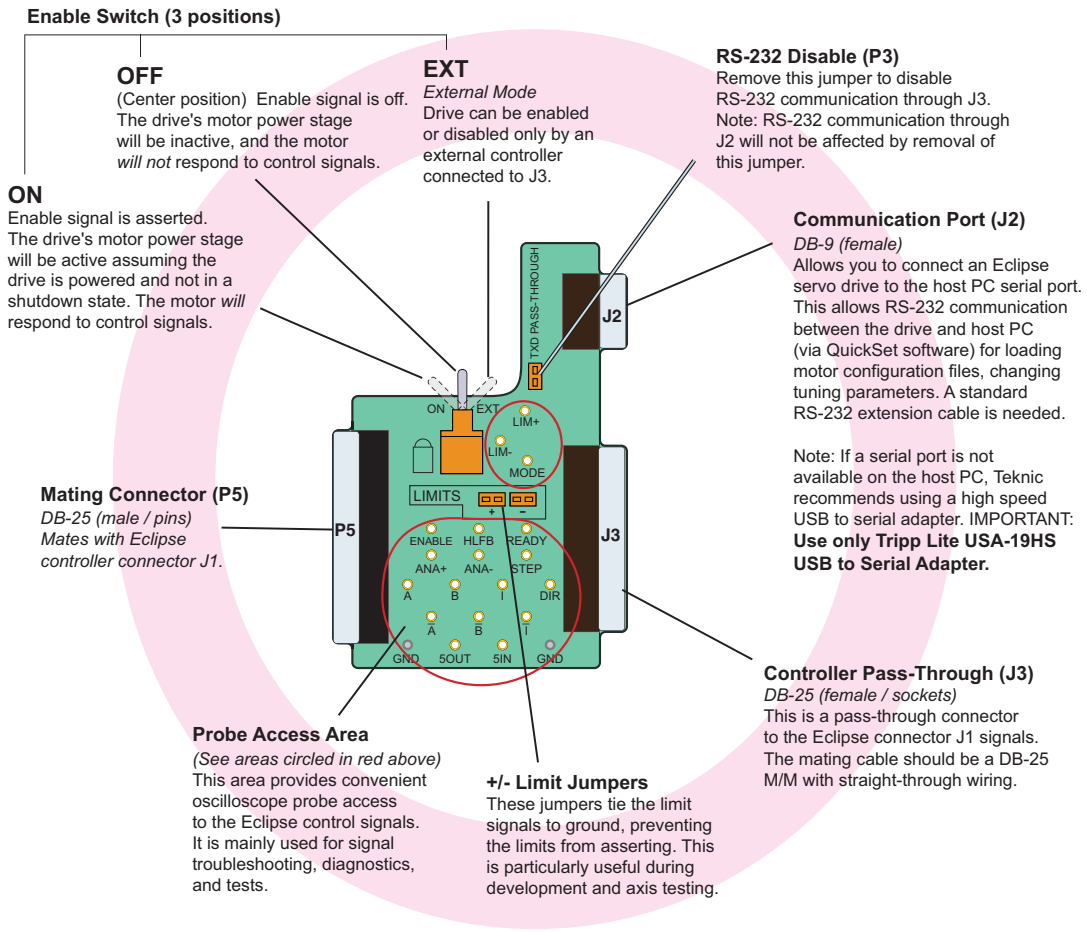

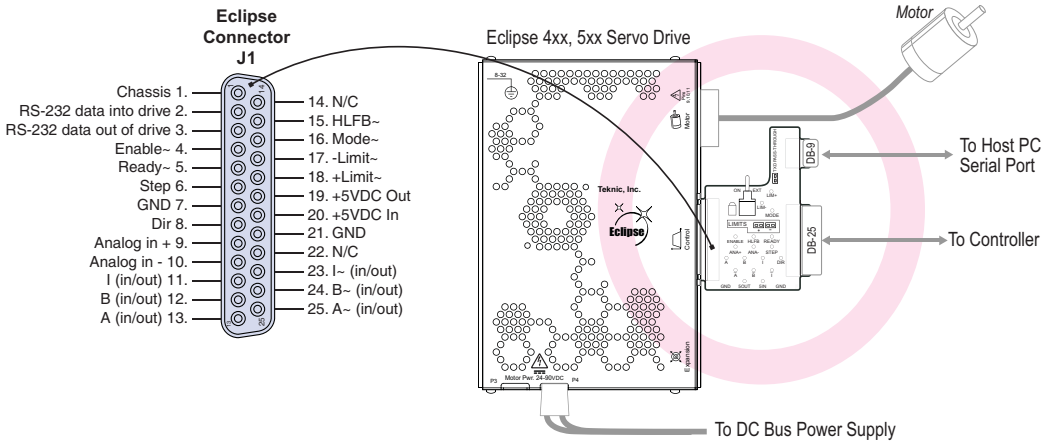

APPENDIX G: SIZING A POWER SUPPLY FOR ECLIPSE E4XX/E5XX DRIVES

SIZING A POWER SUPPLY (ECLIPSE E4XX/E5XX MODELS)

The following calculations will help you determine the power supply requirements for an SSt-Eclipse operating under various loading from an arbitrary supply voltage with any motor. In actual practice, these calculations may be difficult to apply due to varying duty cycles, loads and machine sequences. Often the best way to size a supply is to run your machine while measuring the RMS current between the bridge rectifier and transformer with the RMS filter in your ammeter set to 10 seconds or more. The transformer is then sized so that its RMS limit is not exceeded.

CALCULATING PEAK CURRENT REQUIREMENT

To calculate peak supply current demand from any Eclipse servo drive you need to know three things: [1] the supply voltage (V_s), [2] the phase to phase resistance of the motor (R_t), and [3] the peak shaft power (S_{pmax}) in Watts available from the motor when the SSt-Eclipse is supplied by V_s.

The peak current demand (I_{smax}) for brushless motors is then:

$$I_{s\max} = \frac{\lfloor 0.75 I_p 2R_t + S_{pamx} \rfloor}{V_s},$$

where I_p is the maximum current output of the SSt-Eclipse.

Peak shaft power of a vector driven brushless motor is highly dependent upon the inductance of the motor, the number of motor poles, supply voltage, drive peak current and the winding resistance. It cannot, in general, be easily calculated. Worst case peak shaft power values have been pre-calculated and verified for Teknic standard motors when operated with a 75V supply and you should use these in figures your calculations. If you are using a custom motor or a different supply voltage, contact Teknic for an estimate of the peak shaft power that will be produced using an SSt-Eclipse drive.

PEAK CURRENT WHEN USING LESS THAN FULL OUTPUT

If you are planning on using the motor at a peak speed below the speed at which maximum power is produced and/or if you plan to limit the torque to some value (T_p) less than the peak rated torque1 (T_r), then calculate S_{pmax} and I_p as follows for use in the I_{smax} formula above:

$$S_{p\max} = \frac{T_p V_{\max}}{1352}, \text{ and}$$

$$I_p = \frac{23 T_p}{T_r}$$

where V_{max} is the maximum speed in RPM.

CALCULATING RMS CURRENT REQUIREMENT

The RMS current demand from the supply is dependent upon the application type. Two sets of calculations are provided below. If the application is for incremental positioning, as in a "pick and place" machine, then calculation method (1) or (1A) should be used. If the application is a continuous velocity type, such as running a conveyor, then calculation method (2) should be used[7].

1. INCREMENTAL POSITIONING APPLICATIONS

If the application is incremental positioning, then we assume that the torque is being used primarily to accelerate the motor and load from zero to a maximum speed and then to decelerate it back to zero speed again.

We can also assume that the current used to decelerate the load is not drawn from the supply (part of it is actually pumped back into the supply during deceleration). Given this assumption, the maximum RMS current demand from an SSt-Eclipse is:

$$I_{RMS} = \sqrt{\frac{\frac{tdc}{2}\left[\left(S_{p\max} + \frac{3}{4}I_p^2 R_t\right)^3 - \left(\frac{3}{4}I_p^2 R_t\right)^3\right]}{3V_s^2 S_{p\max}}}$$

where tdc is the torque duty cycle defined as:

$$tdc \equiv \frac{\text{torque on time}}{\text{torque on time} + \text{torque off time}}$$

Torque on time should not be confused with the running time of the motor. It is the time that torque is being used to accelerate or decelerate the motor and can be a small portion of the running time when trapezoidal velocity move profiles are used. (It is equivalent to the motor running time when only triangular velocity type move profiles are used.)

tdc can be a maximum of 0.15 for an SSt-Eclipse that uses full output torque to accelerate and decelerate the load (at this duty cycle the output current is 9A RMS which is the rated limit of the Motor connector). You should attempt to estimate tdc for your application if possible, otherwise use 0.15 as a conservative estimate if you plan to use the full output torque capability for acceleration (although this will probably cause you to over-specify your supply requirements).

1A. INCREMENTAL POSITIONING WITH REDUCED OUTPUT

If you are planning on using the motor at a peak speed below the speed at which maximum power is produced and/or if you plan to limit the torque to some value (T_p) less than the peak rated torque (T_r), then calculate S_{pmax}, I_p and tdc_{max} as follows:

$$S_{p\max} = \frac{T_p V_{\max}}{1352},$$

7 CNC cutting type applications usually are a hybrid of both incremental positioning and constant velocity applications so the higher of the two calculated RMS current figures should be used to determine the worst case maximum RMS current.

$$I_p = \frac{23T_p}{T_r}, \text{ and}$$

$$tdc_{\max} = \min\left[1, \left(\frac{9T_r}{23T_p}\right)^2\right]$$

where V_{max} is the maximum speed in RPM.

Now use these I_p, and S_{pmax} values and your estimate of tdc to calculate I_{RMS} using the formula above. If you can't estimate tdc in your application then use the tdc_{max} calculated above as a conservative estimate (although this will probably cause you to over-specify your supply requirements).

2. CONTINUOUS VELOCITY APPLICATIONS

If the application is for a continuous velocity application such as running a conveyor at some constant speed (V_{cont}) then we assume that the drag load (T_d) is predominant. For these applications you can calculate the RMS supply current required based upon the continuous output power as follows:

$$I_{RMS} = \frac{\lfloor 0.75 I_c 2R_t + S_{pcont} \rfloor}{V_s},$$

where:

$$S_{p\max} = \frac{T_p V_{\max}}{1352}, \text{ and}$$

$$I_p = \frac{23T_p}{T_r}$$

APPENDIX H: WIRING THIRD-PARTY MOTORS

Eclipse servo drives support thousands of third-party motors (i.e. motors made by manufacturers other than Teknic). This section describes how to configure a third-party motor for use with an Eclipse servo drive.

ENTER THE MOTOR SETTINGS

The Motor Settings are entered on the Motor Setup page in QuickSet. If the settings are grayed out, use the Ctrl+Shift+M shortcut to unlock the motor fields for editing. Check the motor manufacturer's website for this basic motor information.

MOTOR WINDING SPECIFICATIONS:

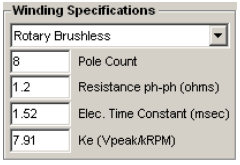

- **Motor Type** – Choose from *Rotary Brushless*, *Linear Brushless*, or *Rotary Brush*.
- **Pole Count** – Enter the number of electrical poles in the motor. Note: All linear motors have two poles.
- **Winding Resistance** – Enter the phase-to-phase winding resistance in ohms.
- **Electrical Time Constant** – Enter the winding inductance (mH) divided by winding resistance (ohms), in milliseconds.
- **Back EMF Value (Ke)** – Enter the reverse voltage or "generator effect" voltage of the motor in peak Volts/kRPM for rotary motors or peak V/in/s for linear motors.
- **Max Continuous (RMS) Current** – Enter this value in amps.
- **Max Time at 3x RMS Current Limit** – This is the number of seconds the drive will output maximum current before it shuts down as a protective measure. Three (3) seconds is a typical setting.

ENCODER SPECIFICATIONS:

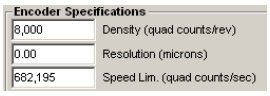

- **Density -** Enter the number of encoder pulses output (post quadrature) per revolution for rotary motors, or the number of encoder pulses per pole-pair for linear motors.
- **Resolution (linear motors only)** – Enter the density of the linear encoder scale in microns. This parameter is not used with rotary motors.
- **Speed Limit** – Enter the upper speed limit of the encoder in post-quadrature counts per second. Once set, if the encoder's speed limit setting is exceeded, the servo drive will actively chop the output PWM of the servo drive, effectively limiting the motor velocity to the speed limit. This will result in poor quality (rough and noisy) motion. Using this parameter as a fail-safe limit can prevent potentially catastrophic problems.

WIRE THE ENCODER AND MOTOR PHASES

This procedure describes how to wire the encoder and motor phases to the Eclipse servo drive.

1) Wire up the encoder and rotate the shaft by hand while viewing the encoder counter in QuickSet. Make sure the encoder counts up and down in the desired direction. Teknic considers counter-clockwise shaft rotation to be the "positive" direction (see figure below). If the encoder counts opposite to the desired direction, make the following wiring changes:
    - For single-ended encoders, swap Encoder A and Encoder B
    - For differential encoders, swap Encoder A with Encoder A~ Test results by manually moving the motor while watching QuickSet's encoder counter for desired direction polarity.

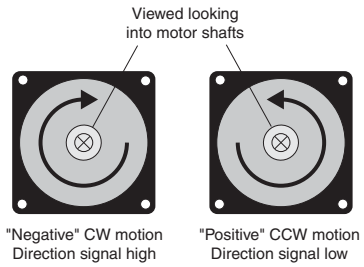

2) Wire the motor phases in any order, i.e. pay no heed to which motor phase wire goes to which phase input on the motor connector.

3) In the Motor Setup page of QuickSet: 1) set the commutation sensors to "Ignore", 2) set polarity to "Normal", 3) enter Max. Continuous (RMS) Current into Sensorless Start field. **Note:** The *Max. Continuous Current value shown below is for illustrative purposes only. Refer to your motor's specifications for this value.*

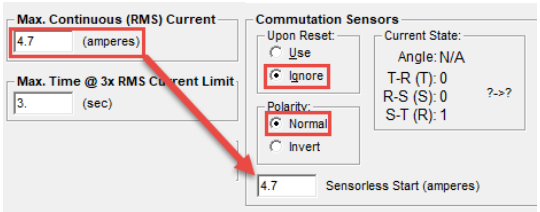

4) Set Kip to 50 and Kii to 200.

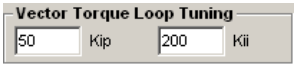

5) With the drive disabled, reset the Eclipse in "Commutation Sensors Ignore" mode. To reset the drive menu option *Drive > Reset Drive*, or use keyboard shortcut Ctrl+R. Make sure the motor is able to move freely. Enable the drive. Note: The motor may move a small amount (up to half of an electrical cycle).

6) Test the motor phases

(a) **For motors with constrained motion:** In the Stimulus Generator, set the drop down menu to Torque or Force (depending on whether the motor is rotary or linear, respectively). Set the stimulus generator amplitude to 2% and the period to 100ms. Turn on the Stimulus Generator. Gradually increase the torque in 1% increments until the motor just begins to move. Once the motor is moving, begin to slowly increase the period by +100mS at a time. If the motor moves through a few electrical cycles smoothly, it is phased correctly. If it locks up or exhibits “lumpy” motion, disable the drive and swap any two phases, then reset the drive and retry.

(b) **For motors with unconstrained motion (such as an unloaded rotary motor):** In the Stimulus Generator, set the drop down menu to Torque or Force (depending on whether you have a rotary or linear motor respectively). Set the stimulus generator amplitude to 2% and the period to 4000ms. Turn on the Stimulus Generator. Gradually increase the torque/force in 1% increments until you begin to see motion. If the motor moves through a few electrical cycles smoothly, it is phased correctly. If it locks up or exhibits “lumpy” motion, disable the drive and swap any two phases, reset the drive and retry.

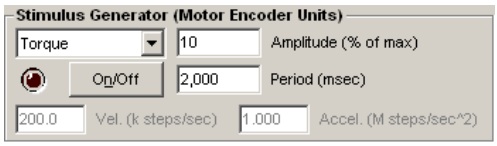

Stimulus generator window

WIRING THE HALL/COMMUTATION SENSORS

This procedure describes how to wire the Hall effect commutation sensors from a third-party motor to the Eclipse servo drive. This will enable the servo drive to use the motor’s commutation sensors to automatically set the electromagnetic vector upon a drive reset. You can skip this section if the motor does not use 120° Hall effect commutation sensors.

1) With the drive disabled, wire the commutation sensors to the drive’s motor connector in any order.
2) Plug the motor connector into the drive.
3) Reset the drive via menu option *Drive* > *Reset Drive*, or by using keyboard shortcut Ctrl+R.
4) Set the drive to "Commutation Sensors - Ignore" mode
5) Enable the drive. Note: the motor may move up to half of an electrical cycle.
6) Disable the motor and manually move the motor shaft in order to measure the 2-6 and 4-5 Hall edge transitions. Record their values (TR, RS and ST Hall states can be found on the Motor Setup page in the Current State section).

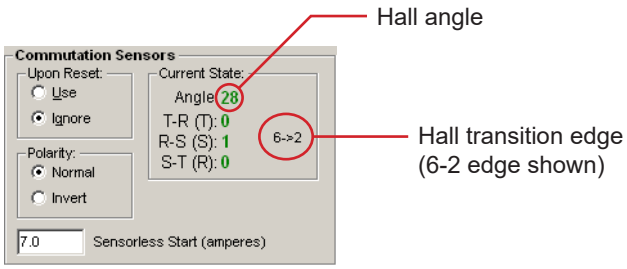

Commutation sensor status (Motor Setup page)

7) Compare your recorded values to those in the table below. If the 2-6 edge reads 30° (+/- 10 °) and the 4-5 edge reads 270° (+/- 10 °) your wiring is correct. Proceed to #11.

If the angle at the 2-6 edge is:	***If the angle at the 4-5 edge is:***	***Do this:***
30	**270**	**No action, Correct**
30	150	Swap ST-RS, invert polarity
90	210	Swap ST-TR
90	330	Rotate 2r, invert polarity
150	30	Rotate 1r
150	270	Swap RS-TR, invert polarity
210	90	Invert polarity
210	330	Swap ST-RS
270	30	Swap ST-TR, invert polarity
270	150	Rotate 2r
330	90	Swap RS-TR
330	210	Rotate 1r, invert polarity

8) If the Hall angles are incorrect, swap, rotate, and/or set the Polarity setting to “Invert” as indicated in the table above. “Rotate 1r" (rotate one position right) means move TR Hall to RS input, RS Hall to ST input, and ST Hall to TR input. "Rotate 2r" means move TR Hall to ST input, RS Hall to TR input, and ST Hall to RS input. The following table tells you how to properly rotate the Hall wiring.

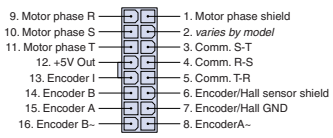

E4xx/5xx Connector P5

E4xx/E5xx		**E6xx/E7xx**	
Connector P5		Connector P5-A	
Rotate 1R		***Rotate 1R***	
From pin	*To pin*	*From pin*	*To pin*
4 (RS)	3 (ST)	13 (RS)	14 (ST)
3 (ST)	5 (TR)	14 (ST)	6 (TR)
5 (TR)	4 (RS)	6 (TR)	13 (RS)
Rotate 2R		***Rotate 2R***	
From pin	*To pin*	*From pin*	*To pin*
4 (RS)	5 (TR)	13 (RS)	6 (TR)
3 (ST)	4 (RS)	14 (ST)	13 (RS)
5 (TR)	3 (ST)	6 (TR)	14 (ST)

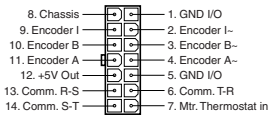

E6xx/7xx Connector P5-A

9) Plug the motor cable back into the drive. Verify that the software is still set to "Commutation Sensors - Ignore" mode.
10) Reset the drive via menu option *Drive* > *Reset Drive*, or by using keyboard shortcut Ctrl+R.
11) Enable the drive. Note: the motor may move up to half of an electrical cycle.
12) Disable the drive. Measure the angle of the 2-6 and 4-5 Hall edge transitions again and compare against the chart above.
13) If the Hall angles are correct, select "Commutation Sensors - Use" in the Motor Setup page. Reset the drive, then re-enable. If the Hall angles are wrong, start over.

Note! The drive requires 120° Hall Effect sensors (the most common type). Important: Other types of Hall Effect sensors are incompatible.

Note! The measured Hall edge angles can vary by ±10 degrees from the nominal values listed in the chart. If the Hall angles are outside this tolerance, you may have a defective motor or a Hall/motor phase mismatch.

Note! The Hall start-up angle will not appear in QuickSet until the drive sees at least one Hall state transition.

TUNING THE VECTOR TORQUE LOOPS

Please contact your Teknic Applications Engineer for assistance with this procedure.

Teknic Incorporated
7650 Omnitech Pl
Victor, NY 14564

Copyright © 2026 Teknic Inc.